JACKSCREW LINE STOP MACHINE

48” Travel – 3” 150# to 12” 150# and 3” 600# to 6” 600#
52” Travel – 3” 150# to 12” 150# and 3” 600# to 8” 600#
72” Travel – 3” 150# to 12” 150# and 3” 600# to 12” 600#

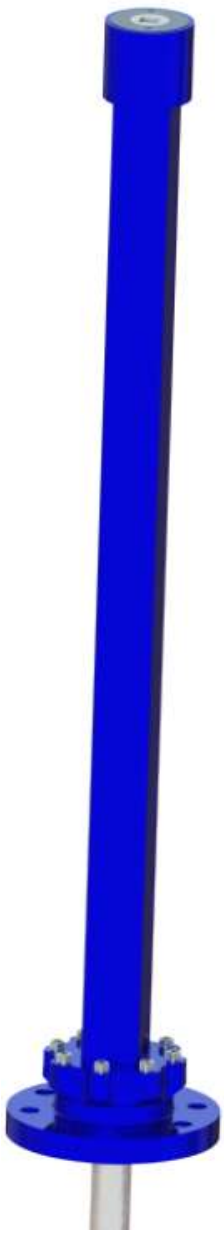

PRESSURE/TEMPERATURE LIMITS WITH PACKING GLAND

48”----------1000 psi
52”---------- 900 psi
72”---------- 500 psi

Maximum Operating Temperature
48” and 52”---------- -20 to 700°F @ 700 psi
72” ---------- - -20 to 700°F @ 500 psi
Control Bar Travel --- Approximately 6 turns to the inch
Machine Drive -------- 1” Female square or 13/16” socket
Control Bar Diameter – 2”
***Using an o-ring gland, the temperature rating is 180°F**

Function	Rating/Operating Dimensions
Maximum Operating Pressure	48” 1000 PSI @ 100°F 52” 900 PSI @ 100°F 72” 500 PSI @ 100°F
Maximum Operating Temperature	48” and 52” -20°F to 700°F @ 700 PSI 72” -20°F to 700°F @ 500 PSI
Maximum Test Pressure	1000 PSI with 600# Flange
Maximum Bar Travel	48”, 52” 72”
Normal Line Stop Range	150# & 600#
Size Range	3” – 12”
Attaching Flange	
O-ring	Smooth Face
RTJ	4” 600#
Attaching Flange Bolt Size	
O-ring	½”- 13 x 3-1/2”
RTJ	
Flat Faced RTJ Flange	⅞”-9 x 3”
Raced Face RTJ Flange	⅞”-9 x 3-1/2”
RTJ Gasket Size	R 37
O-Ring Size	#427 (5.276” OD x 4.725” ID 0.275” Cross Section) #348 (4.770” OD x 4.350” ID 0.210” Cross Section) #344 (4.270” OD x 3.850” ID 0.210” Cross Section)
Control Bar Diameter	2”
Control Bar Bolt Size	⅜” x 3” Shoulder Bolt
Control Bar Bolt Nut Size	5/16”- 18
Bar Lock Wrench Size	⅜” Hex Key
Weight With Out Housing	70LBS, 85 LBS, 95 LBS

NOTE: EQUIPMENT AVAILABILITY MUST BE VERIFIED BEFORE THE START OF THE JOB.

NOTE: ALL WEIGHTS AND DIMENSIONS ARE BASED ON AVAILABLE DATA AND SUBJECT TO CHANGE.

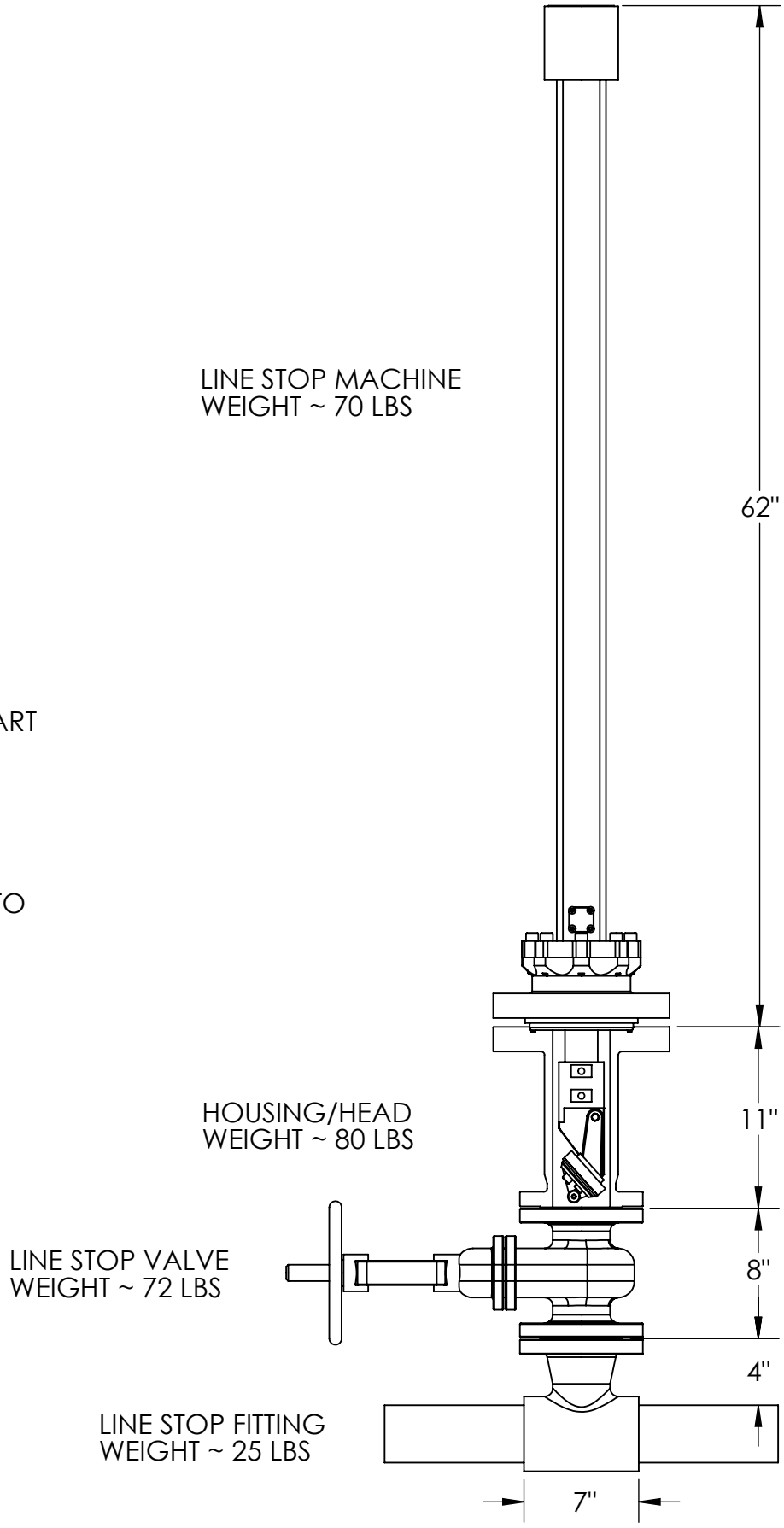

3" 150# LINE STOP 48" JACKSCREW

NOTE: EQUIPMENT AVAILABILITY MUST BE VERIFIED BEFORE THE START OF THE JOB.

NOTE: ALL WEIGHTS AND DIMENSIONS ARE BASED ON AVAILABLE DATA AND SUBJECT TO CHANGE.

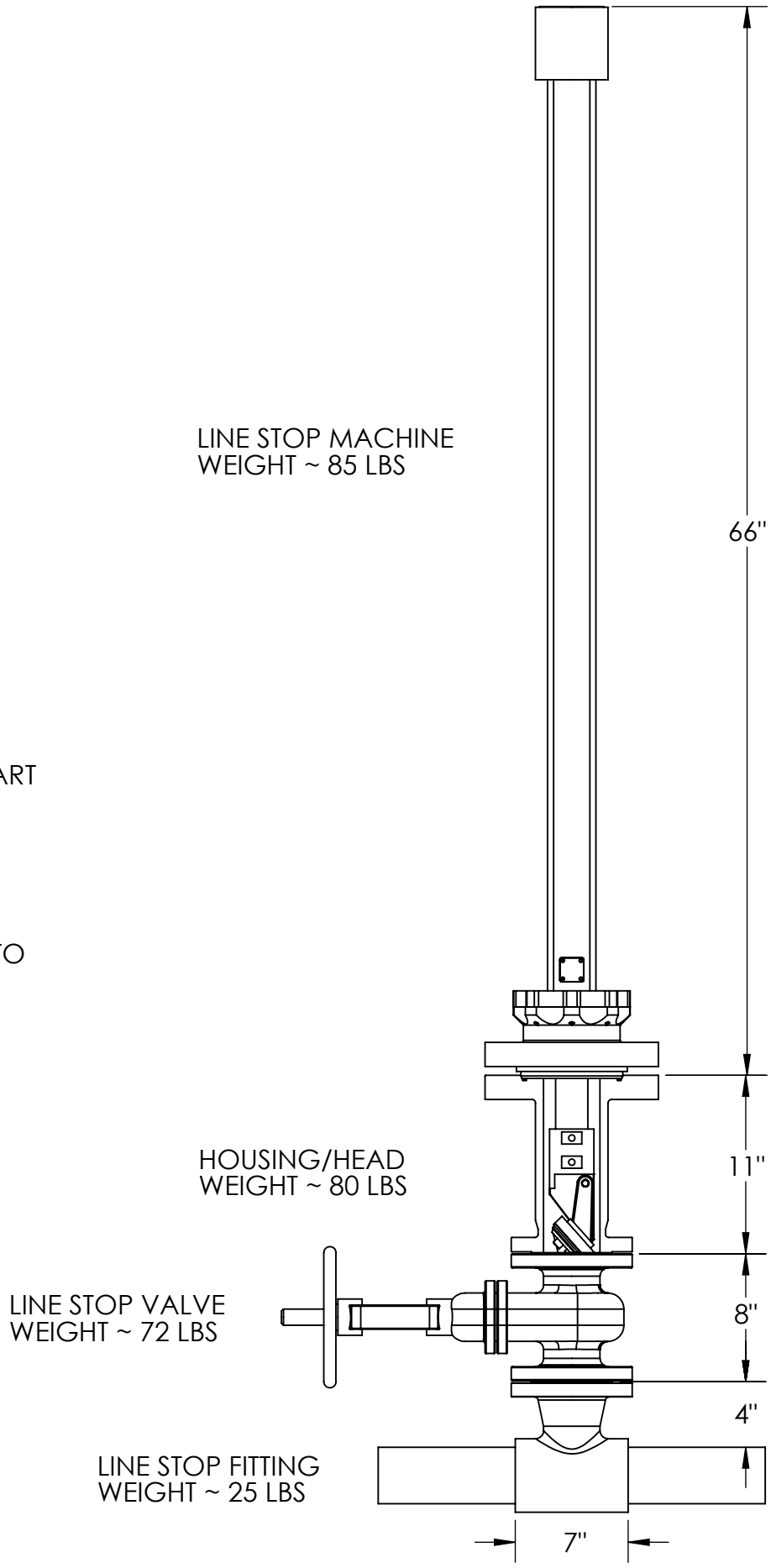

3" 150# LINE STOP 52" JACKSCREW

NOTE: EQUIPMENT AVAILABILITY MUST BE VERIFIED BEFORE THE START OF THE JOB.

NOTE: ALL WEIGHTS AND DIMENSIONS ARE BASED ON AVAILABLE DATA AND SUBJECT TO CHANGE.

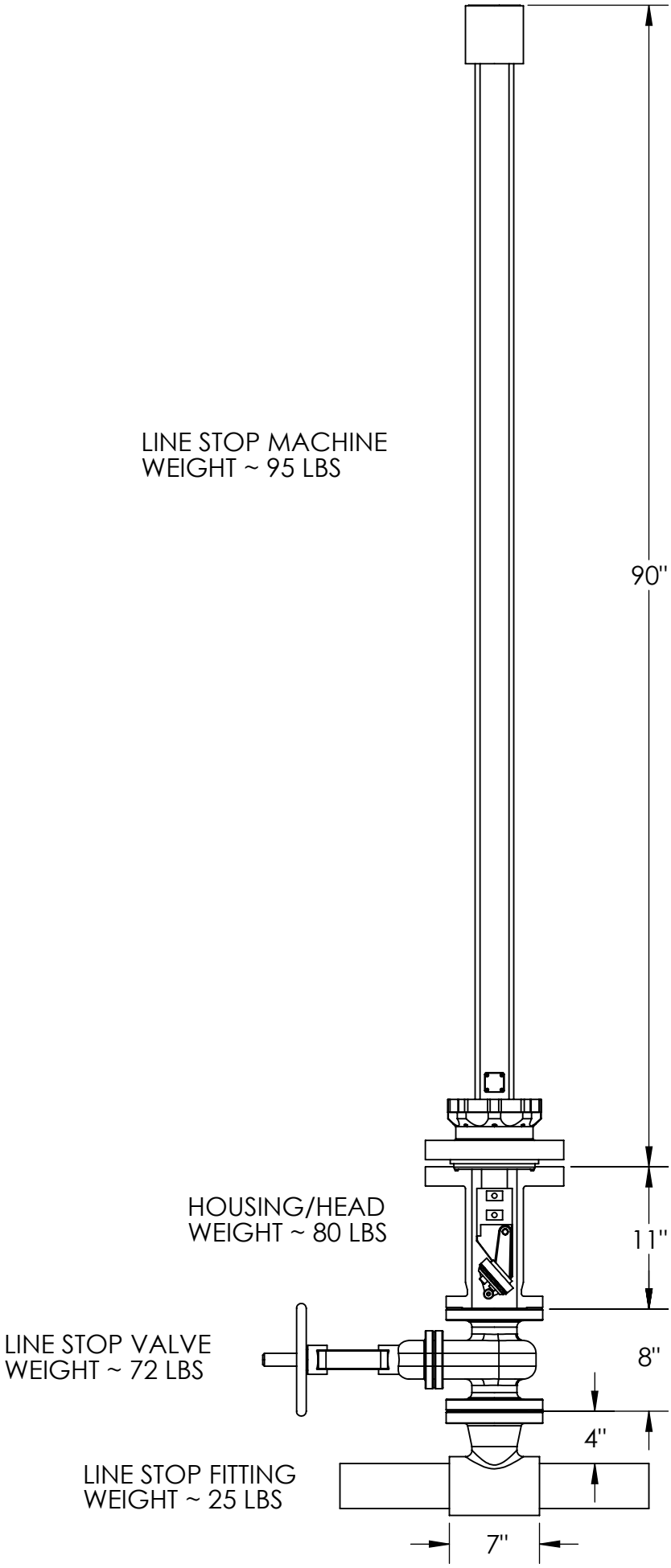

3" 150# LINE STOP 72" JACKSCREW

NOTE: EQUIPMENT AVAILABILITY MUST BE VERIFIED BEFORE THE START OF THE JOB.

NOTE: ALL WEIGHTS AND DIMENSIONS ARE BASED ON AVAILABLE DATA AND SUBJECT TO CHANGE.

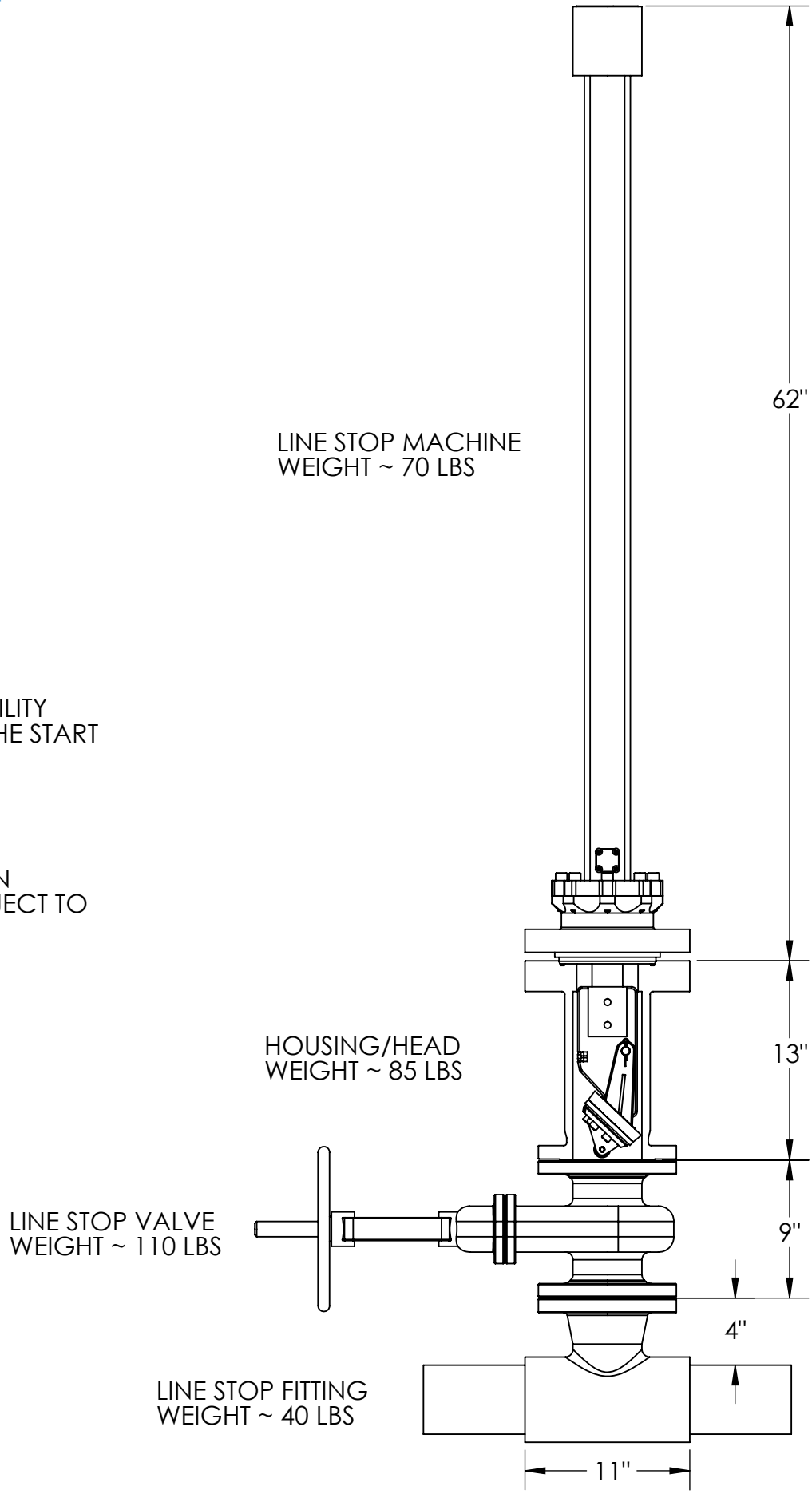

4" 150# LINE STOP 48" JACKSCREW

NOTE: EQUIPMENT AVAILABILITY MUST BE VERIFIED BEFORE THE START OF THE JOB.

NOTE: ALL WEIGHTS AND DIMENSIONS ARE BASED ON AVAILABLE DATA AND SUBJECT TO CHANGE.

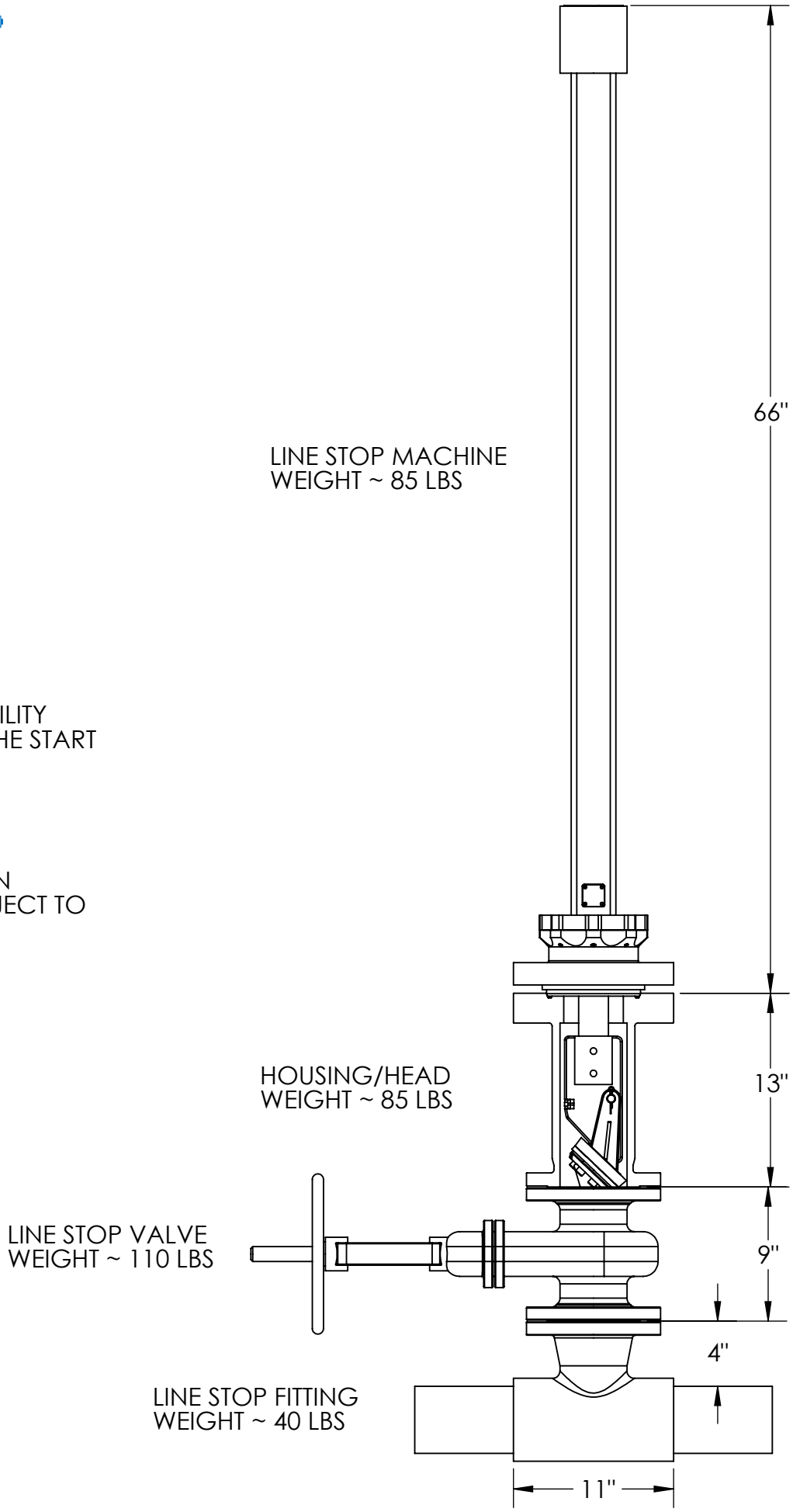

4" 150# LINE STOP 52" JACKSCREW

TEAM®

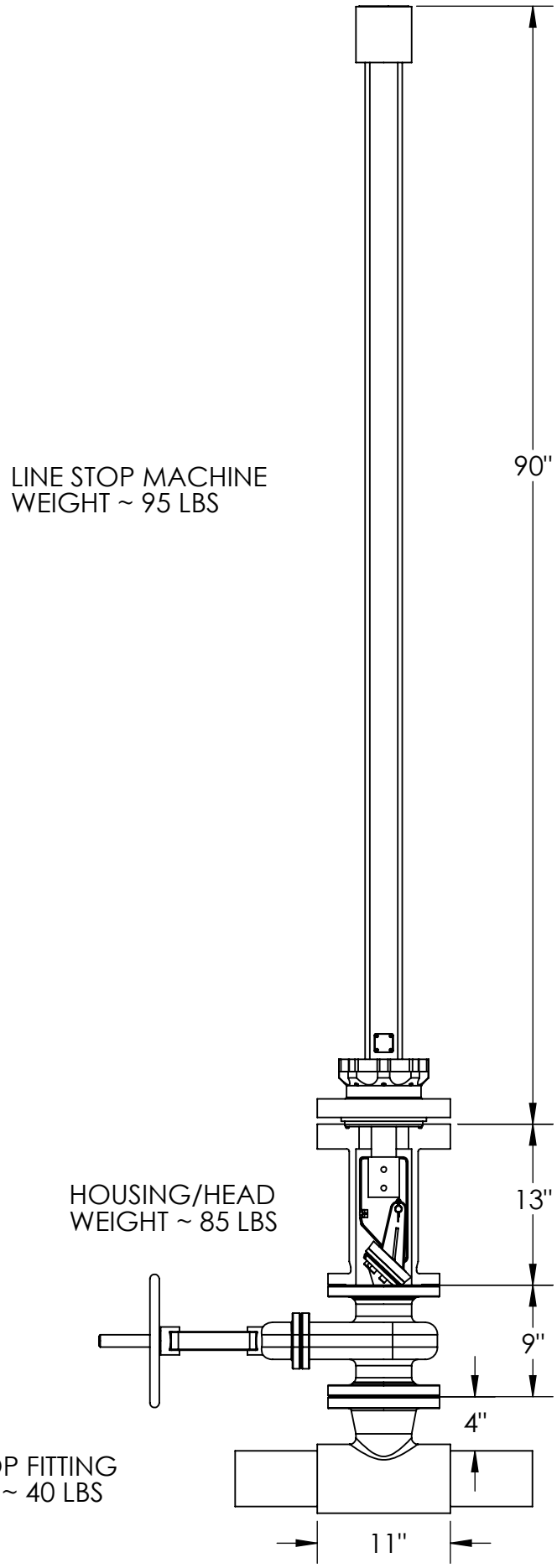

NOTE: EQUIPMENT AVAILABILITY MUST BE VERIFIED BEFORE THE START OF THE JOB.

NOTE: ALL WEIGHTS AND DIMENSIONS ARE BASED ON AVAILABLE DATA AND SUBJECT TO CHANGE.

4" 150# LINE STOP 72" JACKSCREW

NOTE: EQUIPMENT AVAILABILITY MUST BE VERIFIED BEFORE THE START OF THE JOB.

NOTE: ALL WEIGHTS AND DIMENSIONS ARE BASED ON AVAILABLE DATA AND SUBJECT TO CHANGE.

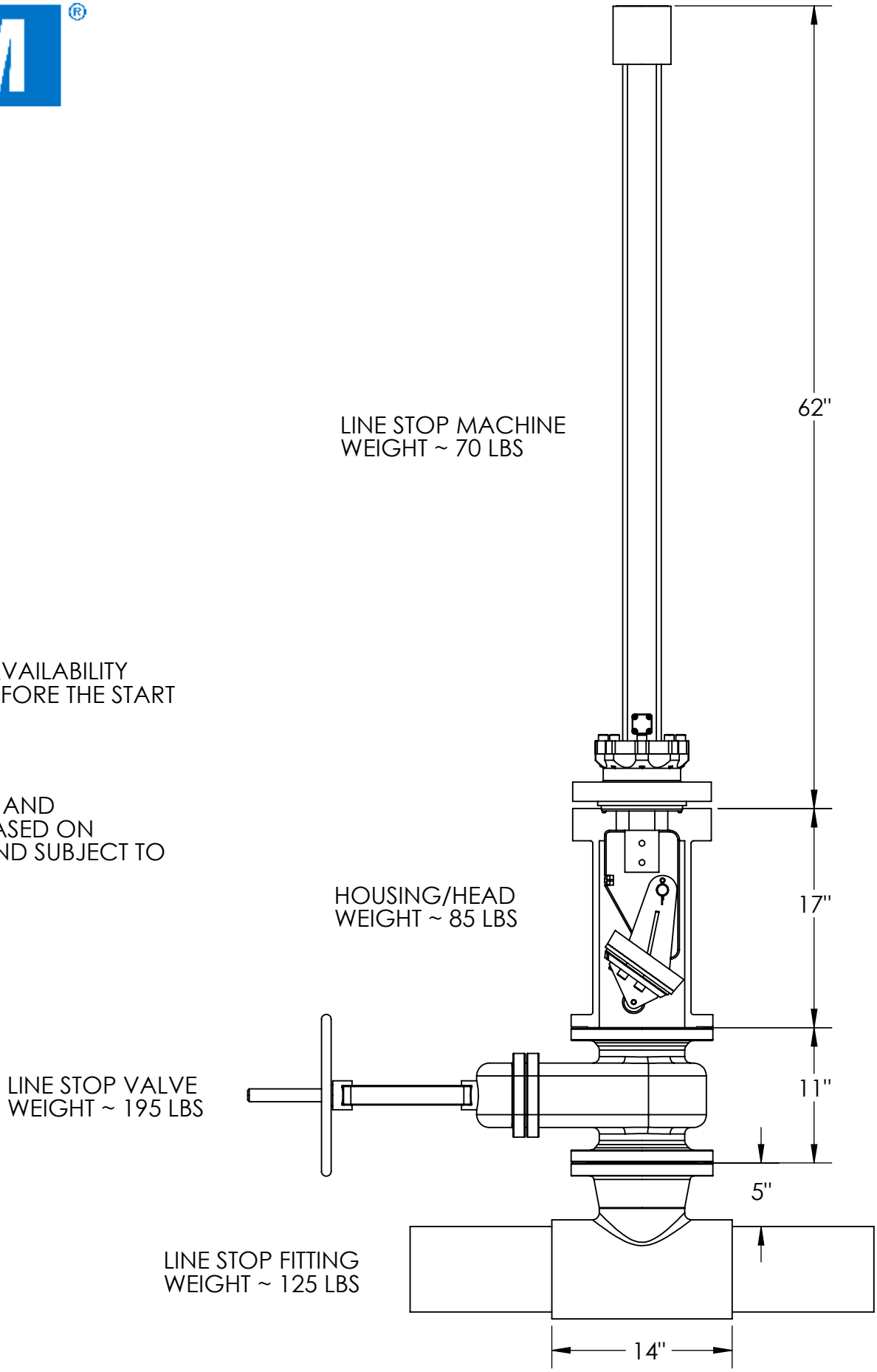

6" 150# LINE STOP 48" JACKSCREW

NOTE: EQUIPMENT AVAILABILITY MUST BE VERIFIED BEFORE THE START OF THE JOB.

NOTE: ALL WEIGHTS AND DIMENSIONS ARE BASED ON AVAILABLE DATA AND SUBJECT TO CHANGE.

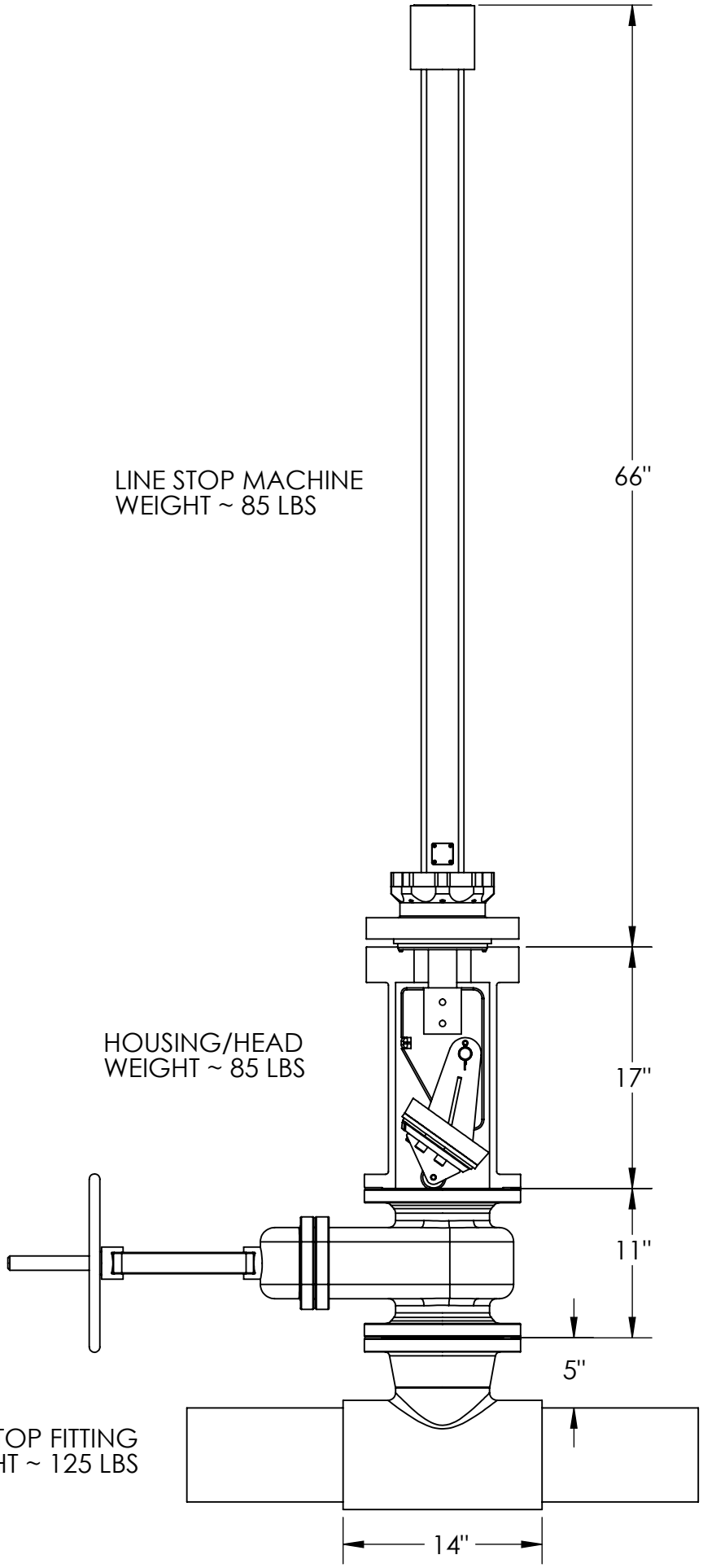

6" 150# LINE STOP 52" JACKSCREW

NOTE: EQUIPMENT AVAILABILITY MUST BE VERIFIED BEFORE THE START OF THE JOB.

NOTE: ALL WEIGHTS AND DIMENSIONS ARE BASED ON AVAILABLE DATA AND SUBJECT TO CHANGE.

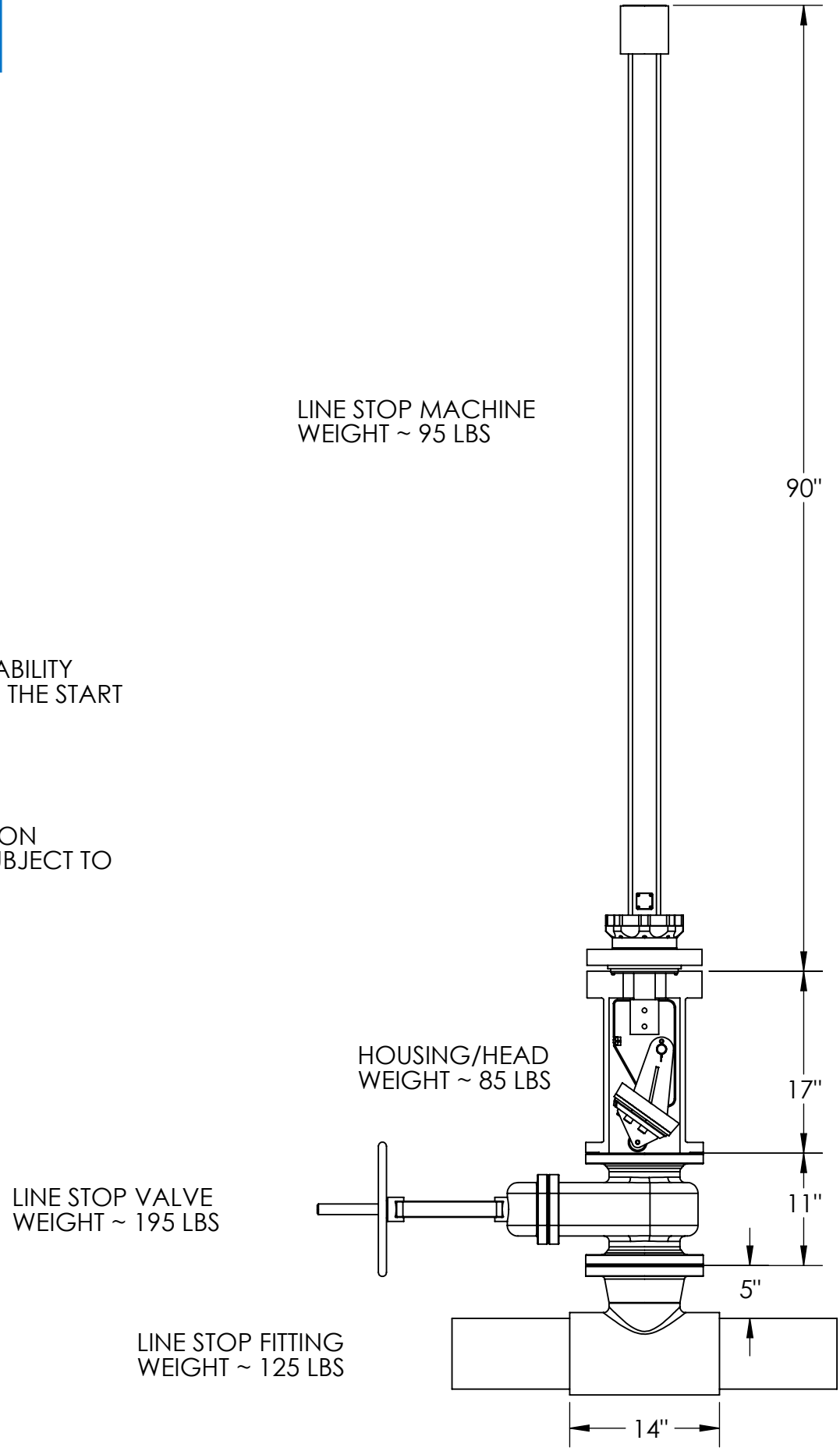

6" 150# LINE STOP 72" JACKSCREW

NOTE: EQUIPMENT AVAILABILITY MUST BE VERIFIED BEFORE THE START OF THE JOB.

NOTE: ALL WEIGHTS AND DIMENSIONS ARE BASED ON AVAILABLE DATA AND SUBJECT TO CHANGE.

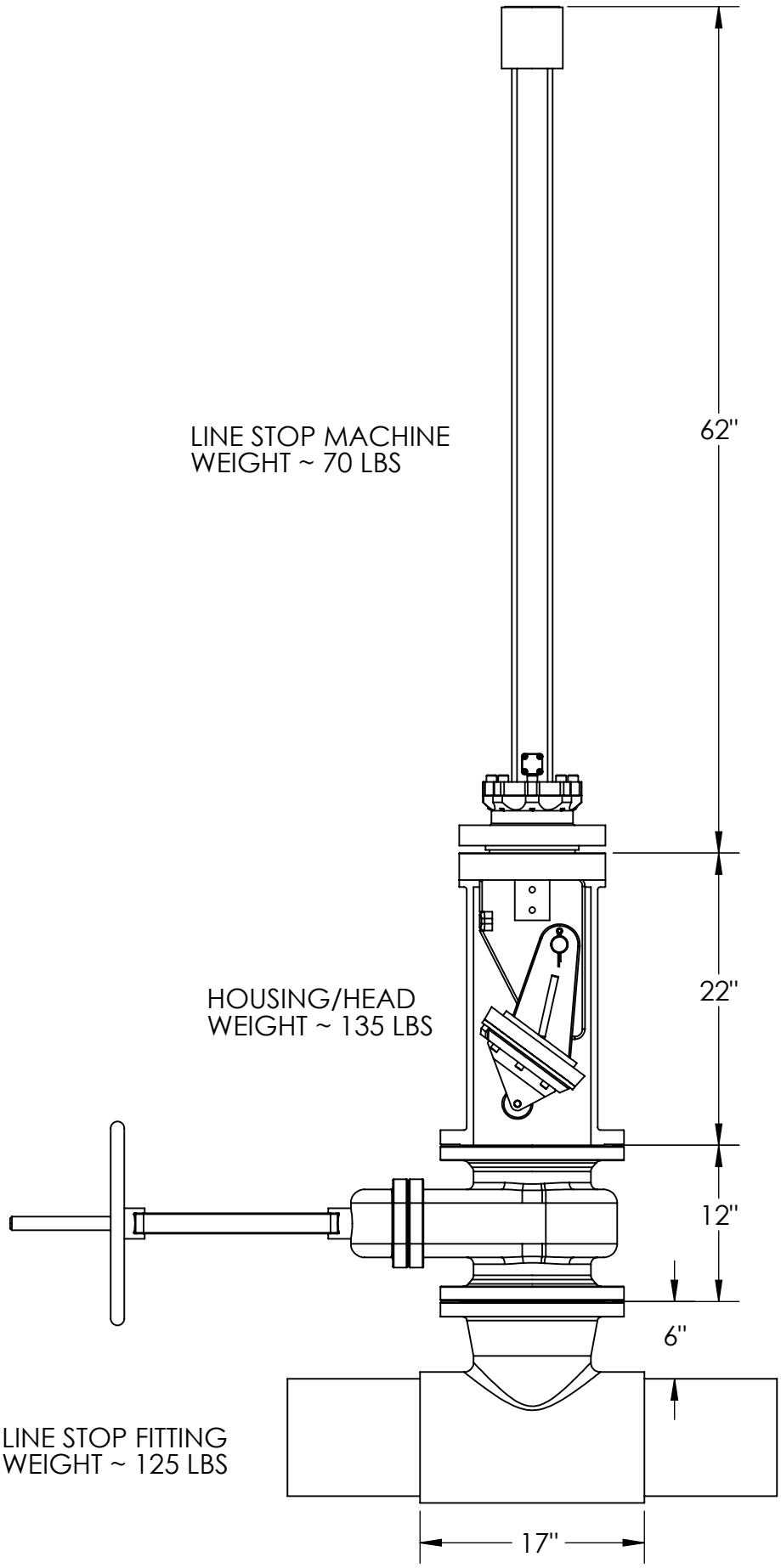

8" 150# LINE STOP 48" JACKSCREW

NOTE: EQUIPMENT AVAILABILITY MUST BE VERIFIED BEFORE THE START OF THE JOB.

NOTE: ALL WEIGHTS AND DIMENSIONS ARE BASED ON AVAILABLE DATA AND SUBJECT TO CHANGE.

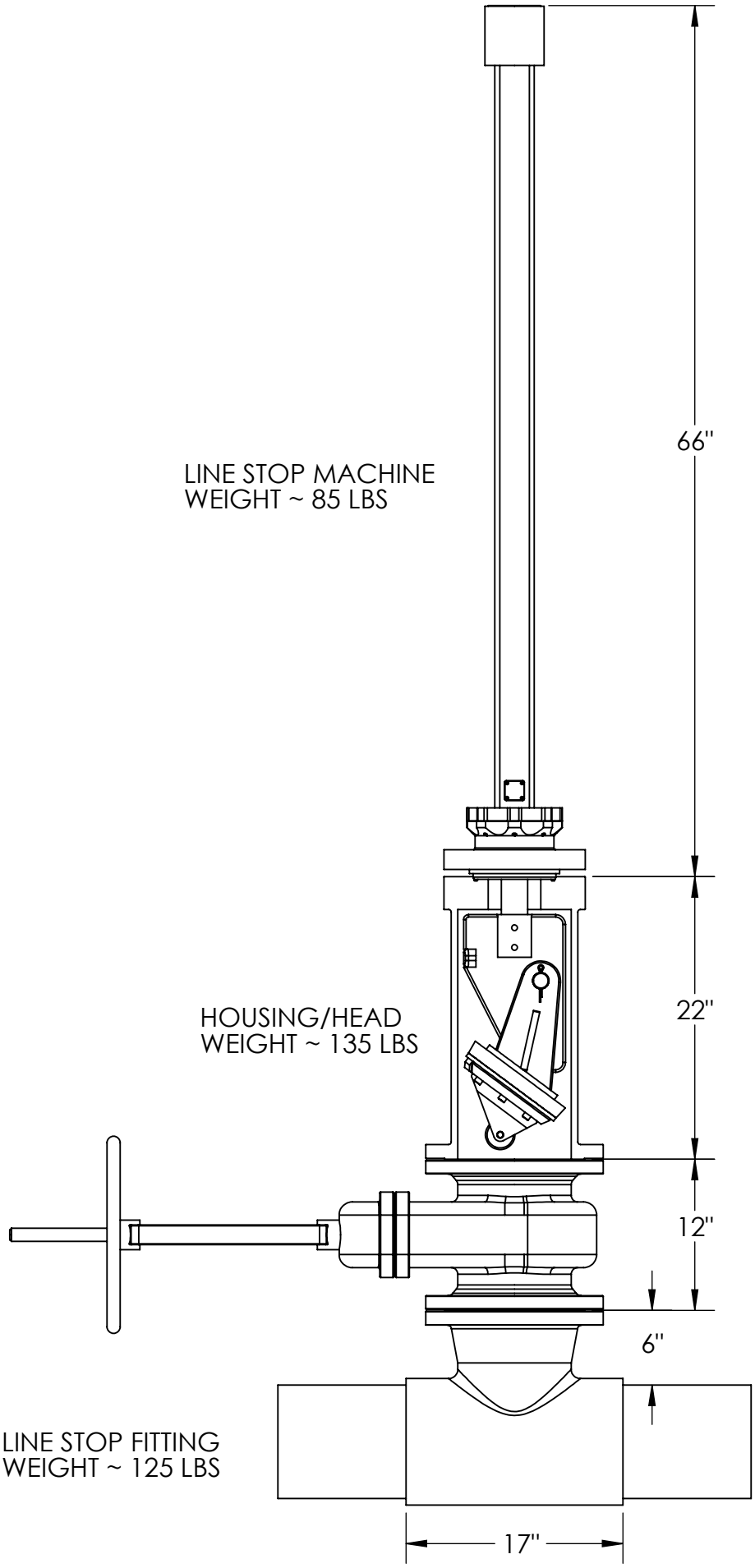

8" 150# LINE STOP 52" JACKSCREW

NOTE: EQUIPMENT AVAILABILITY MUST BE VERIFIED BEFORE THE START OF THE JOB.

NOTE: ALL WEIGHTS AND DIMENSIONS ARE BASED ON AVAILABLE DATA AND SUBJECT TO CHANGE.

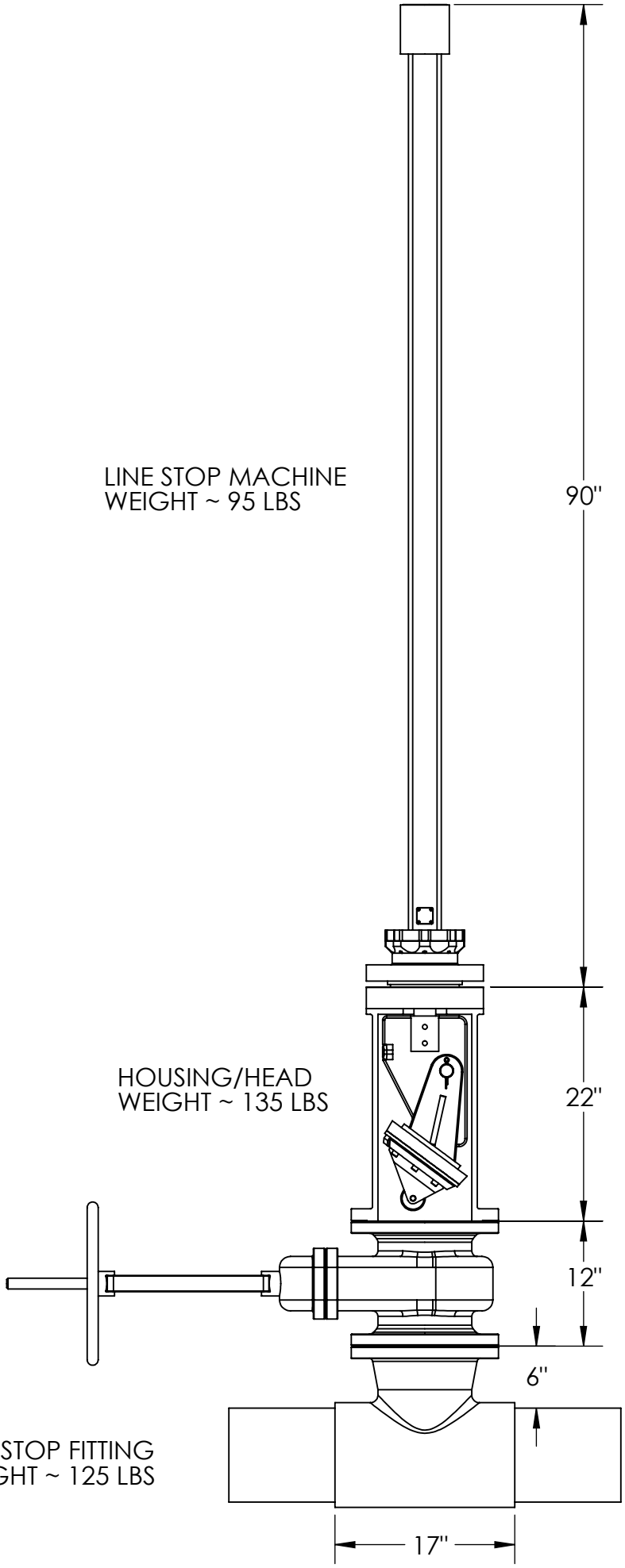

8" 150# LINE STOP 72" JACKSCREW

TEAM®

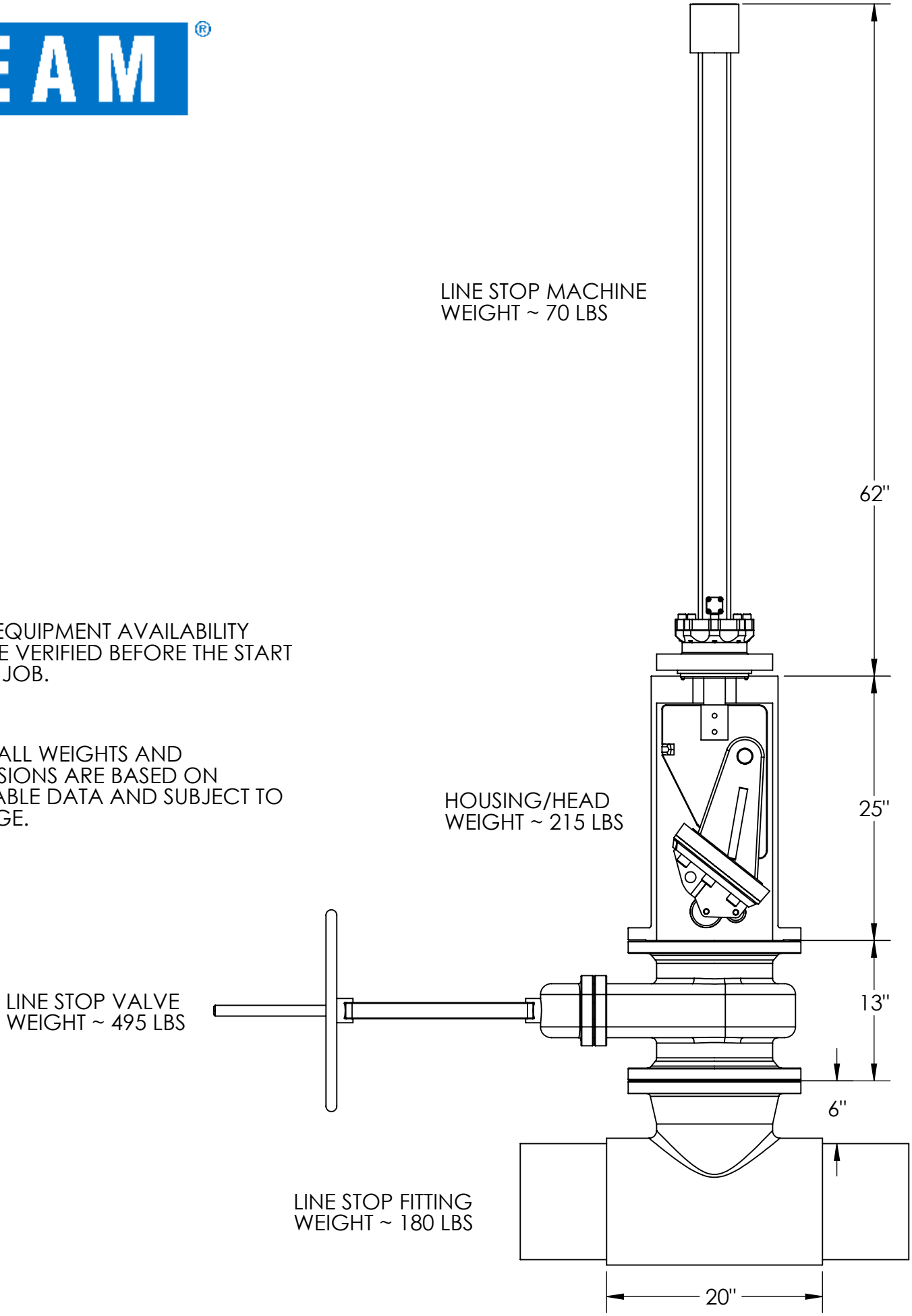

NOTE: EQUIPMENT AVAILABILITY MUST BE VERIFIED BEFORE THE START OF THE JOB.

NOTE: ALL WEIGHTS AND DIMENSIONS ARE BASED ON AVAILABLE DATA AND SUBJECT TO CHANGE.

10" 150# LINE STOP 48" JACKSCREW

TEAM®

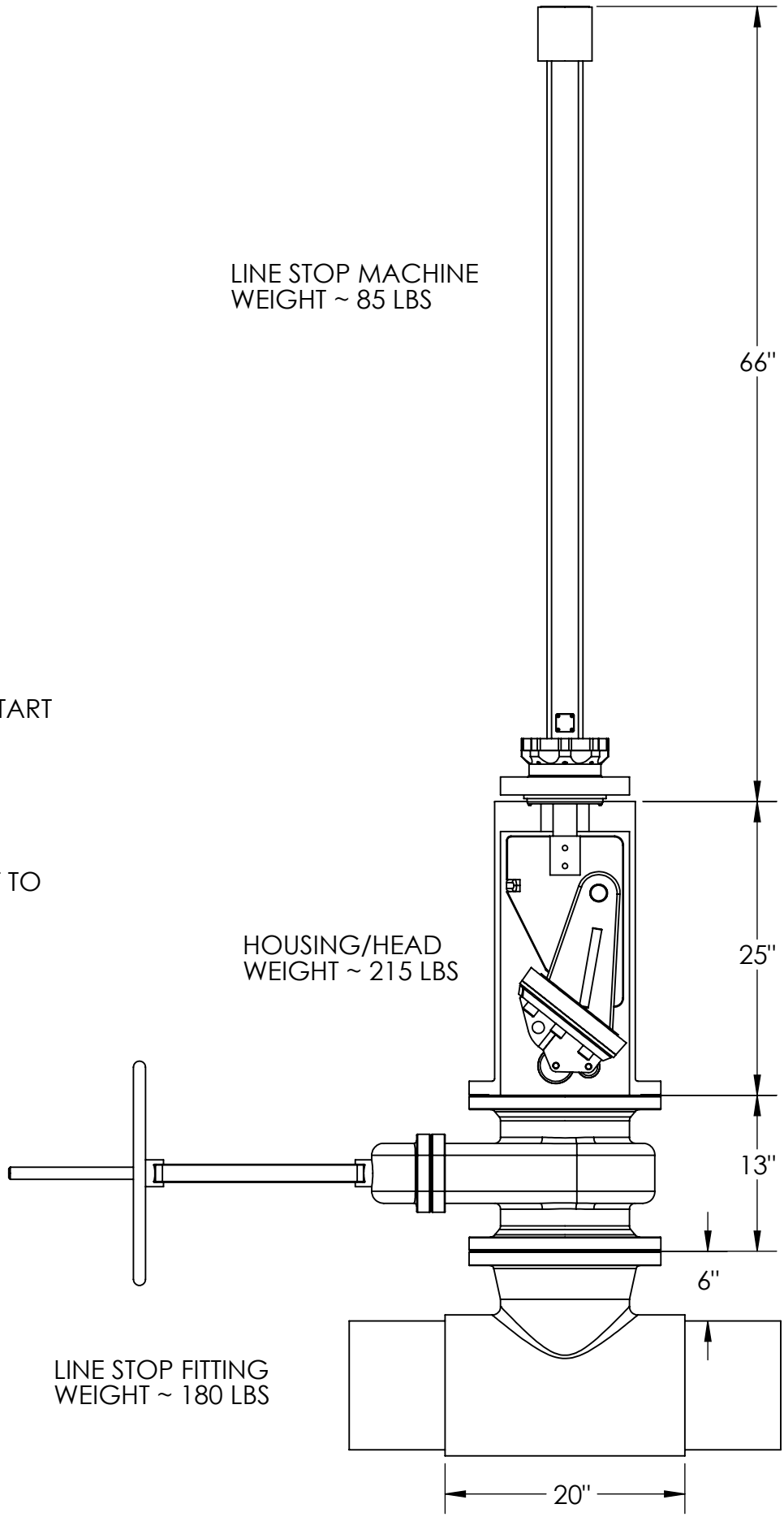

NOTE: EQUIPMENT AVAILABILITY MUST BE VERIFIED BEFORE THE START OF THE JOB.

NOTE: ALL WEIGHTS AND DIMENSIONS ARE BASED ON AVAILABLE DATA AND SUBJECT TO CHANGE.

10" 150# LINE STOP 52" JACKSCREW

NOTE: EQUIPMENT AVAILABILITY MUST BE VERIFIED BEFORE THE START OF THE JOB.

NOTE: ALL WEIGHTS AND DIMENSIONS ARE BASED ON AVAILABLE DATA AND SUBJECT TO CHANGE.

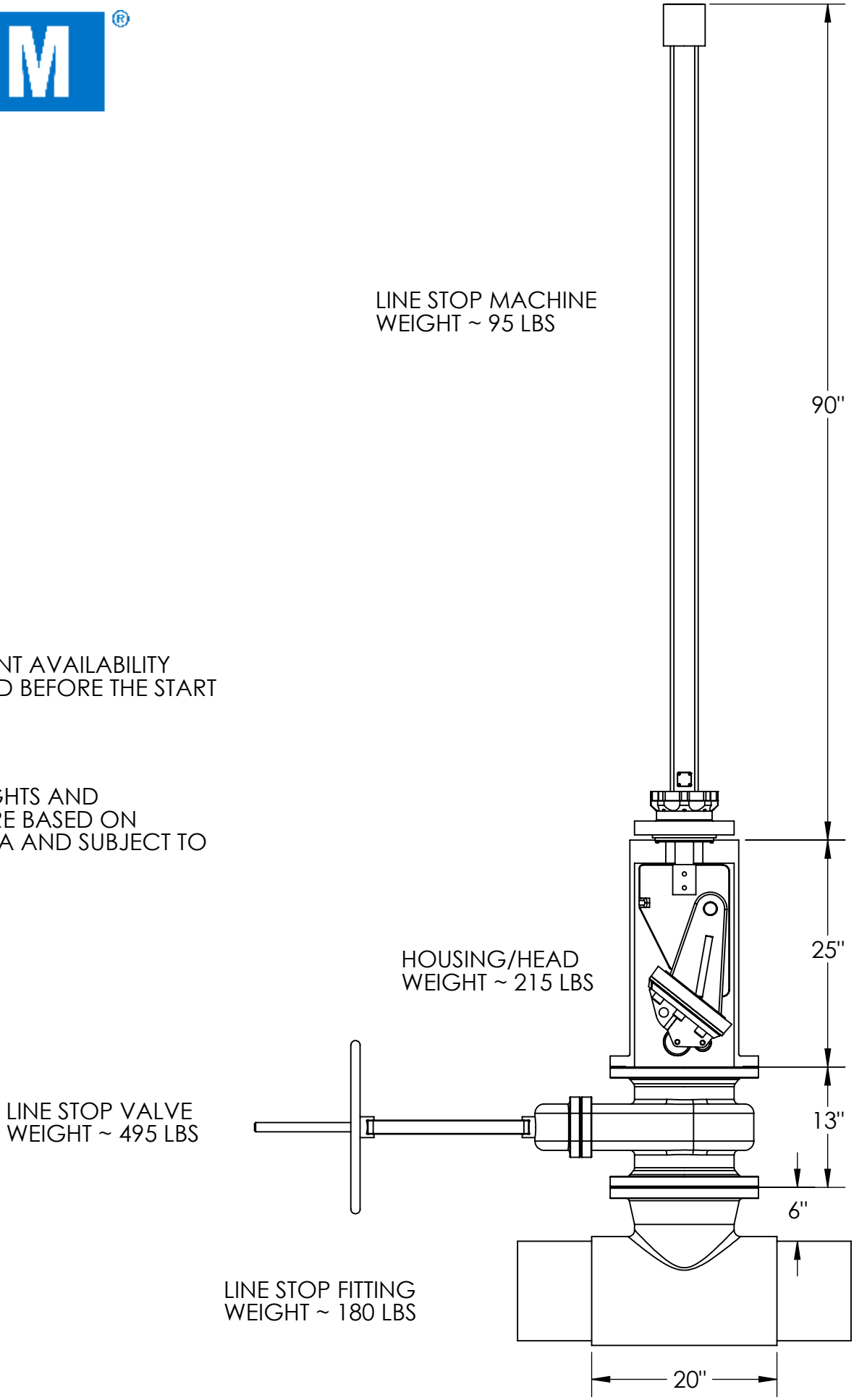

10" 150# LINE STOP 72" JACKSCREW

TEAM®

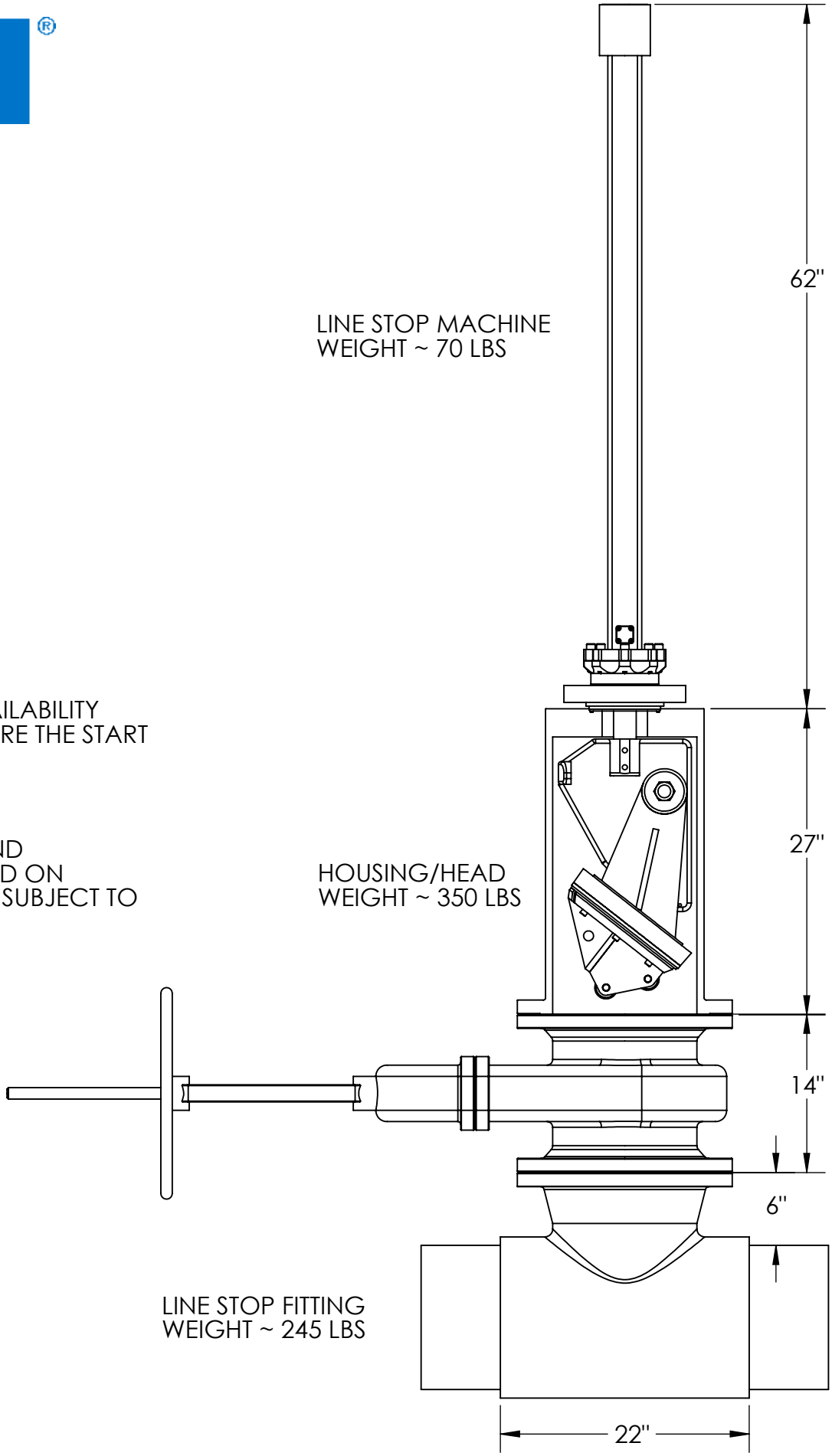

NOTE: EQUIPMENT AVAILABILITY MUST BE VERIFIED BEFORE THE START OF THE JOB.

NOTE: ALL WEIGHTS AND DIMENSIONS ARE BASED ON AVAILABLE DATA AND SUBJECT TO CHANGE.

12" 150# LINE STOP 48" JACKSCREW

TEAM®

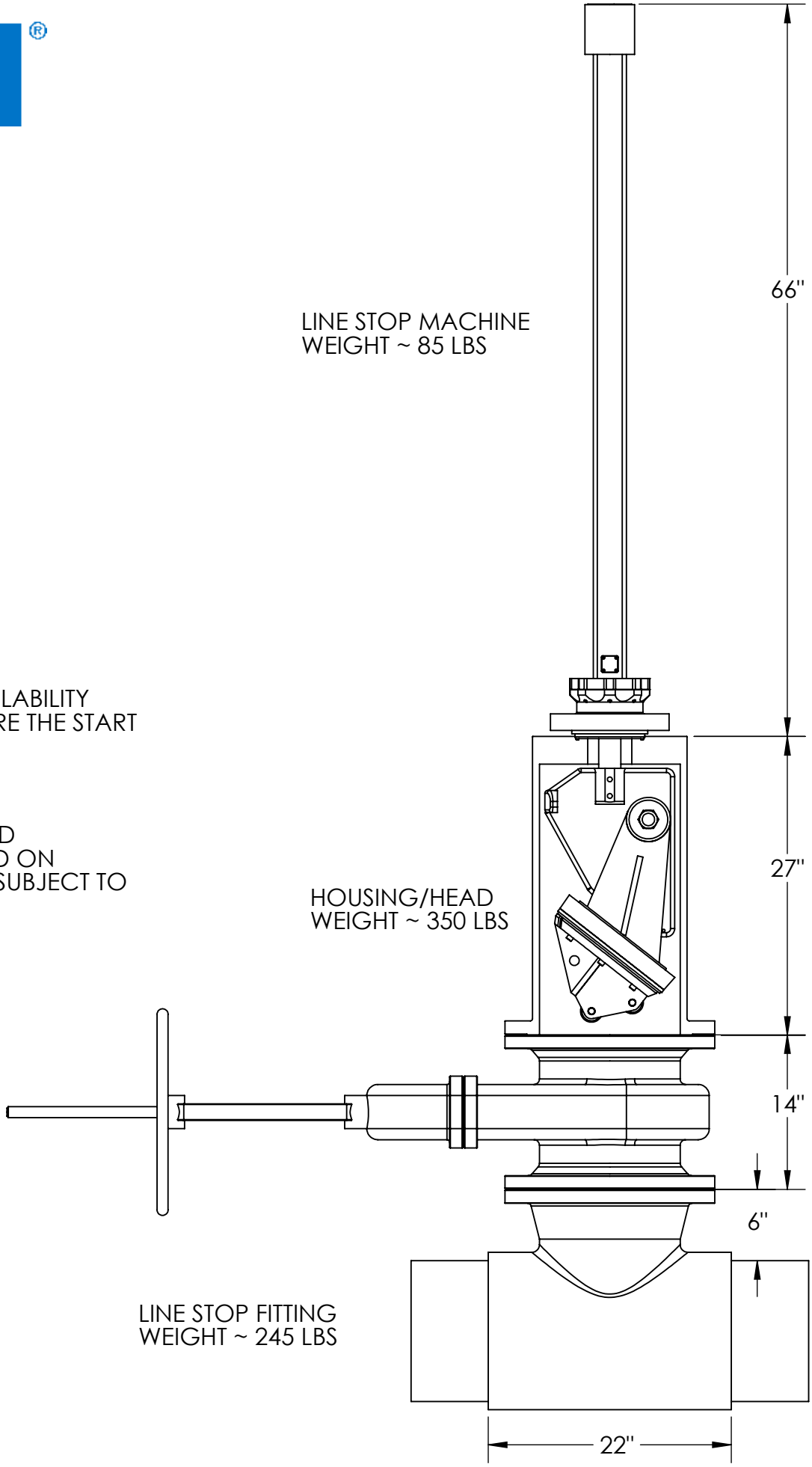

NOTE: EQUIPMENT AVAILABILITY MUST BE VERIFIED BEFORE THE START OF THE JOB.

NOTE: ALL WEIGHTS AND DIMENSIONS ARE BASED ON AVAILABLE DATA AND SUBJECT TO CHANGE.

12" 150# LINE STOP 52" JACKSCREW

TEAM®

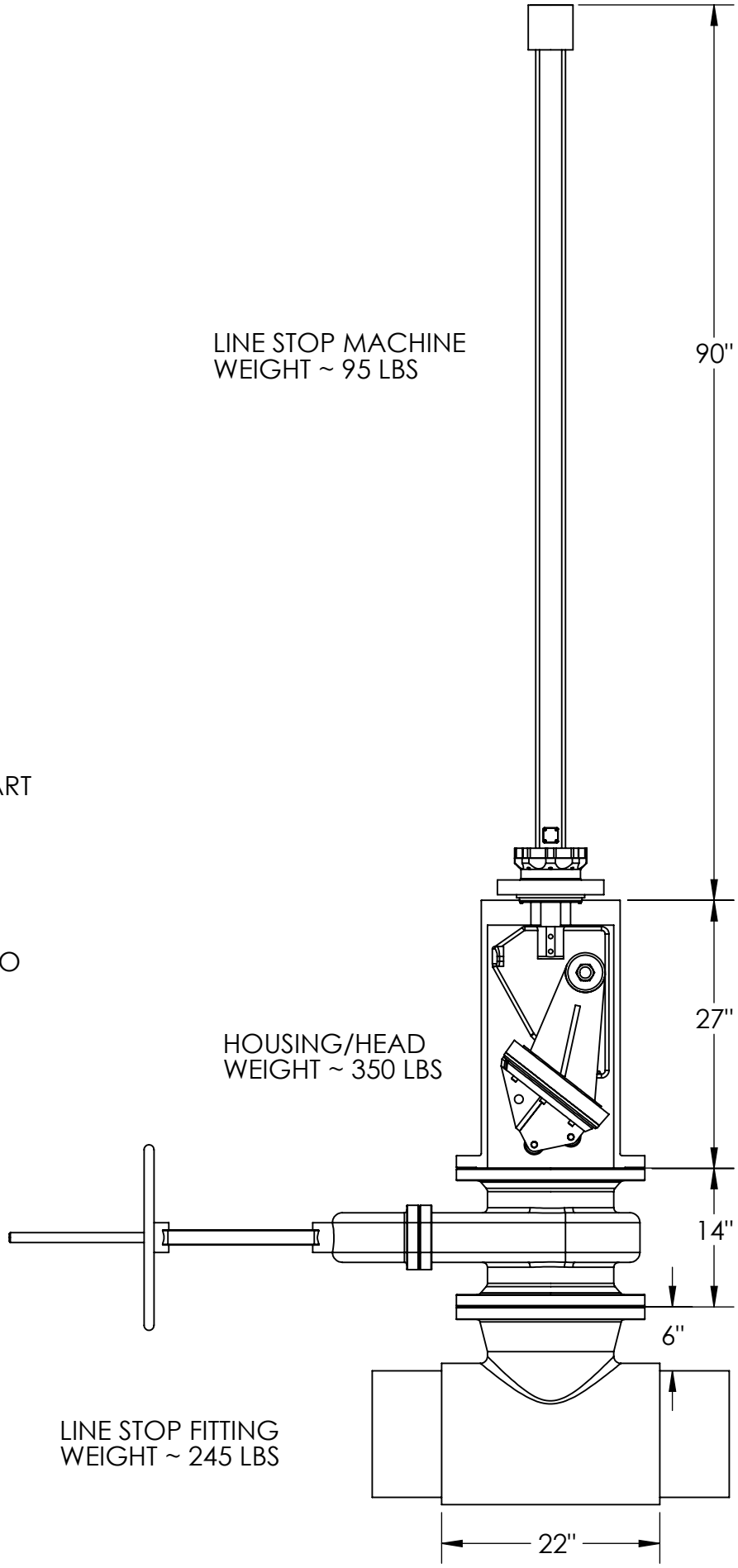

NOTE: EQUIPMENT AVAILABILITY MUST BE VERIFIED BEFORE THE START OF THE JOB.

NOTE: ALL WEIGHTS AND DIMENSIONS ARE BASED ON AVAILABLE DATA AND SUBJECT TO CHANGE.

12" 150# LINE STOP 72" JACKSCREW

NOTE: EQUIPMENT AVAILABILITY MUST BE VERIFIED BEFORE THE START OF THE JOB.

NOTE: ALL WEIGHTS AND DIMENSIONS ARE BASED ON AVAILABLE DATA AND SUBJECT TO CHANGE.

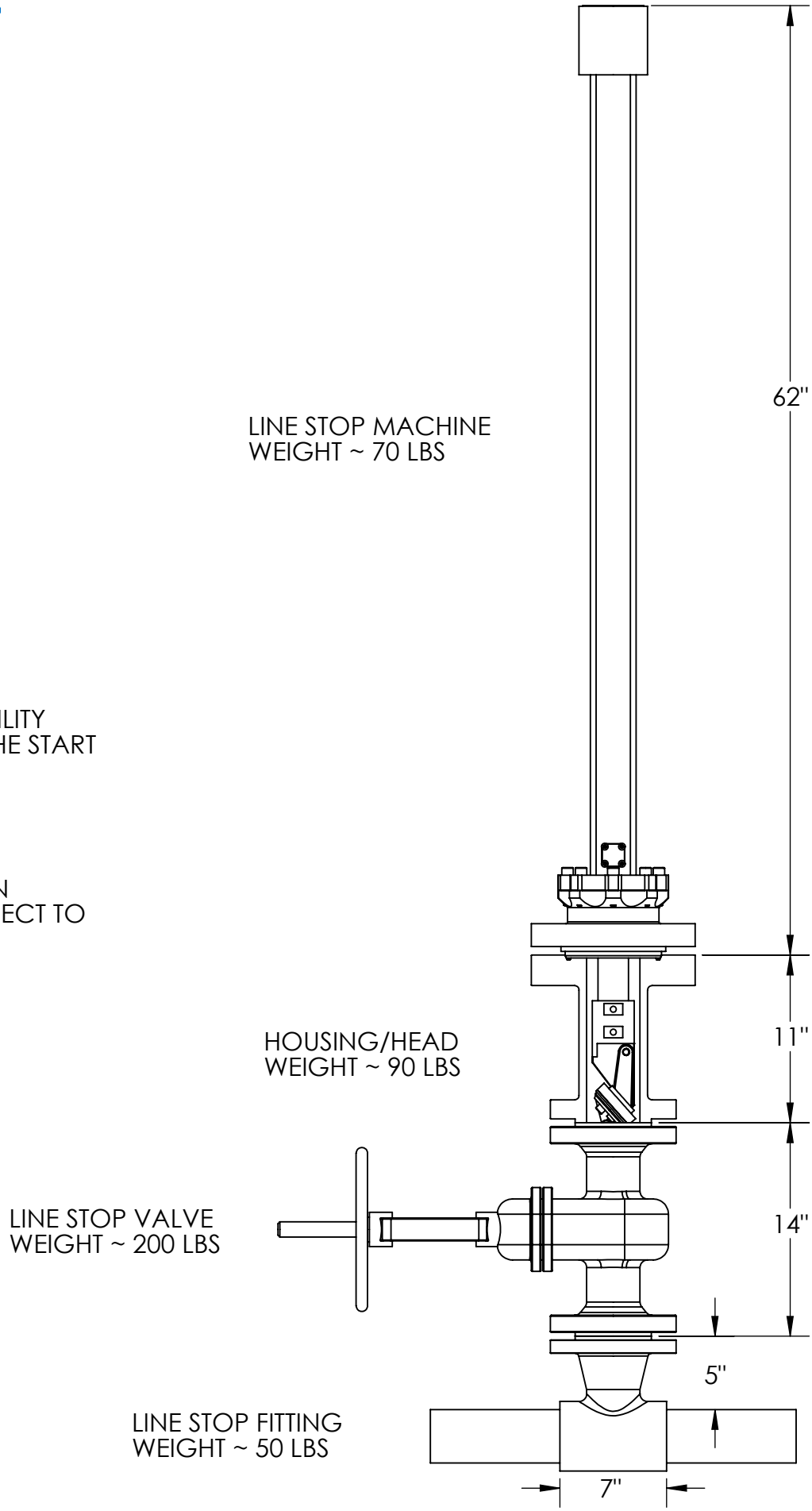

3" 600# LINE STOP 48" JACKSCREW

NOTE: EQUIPMENT AVAILABILITY MUST BE VERIFIED BEFORE THE START OF THE JOB.

NOTE: ALL WEIGHTS AND DIMENSIONS ARE BASED ON AVAILABLE DATA AND SUBJECT TO CHANGE.

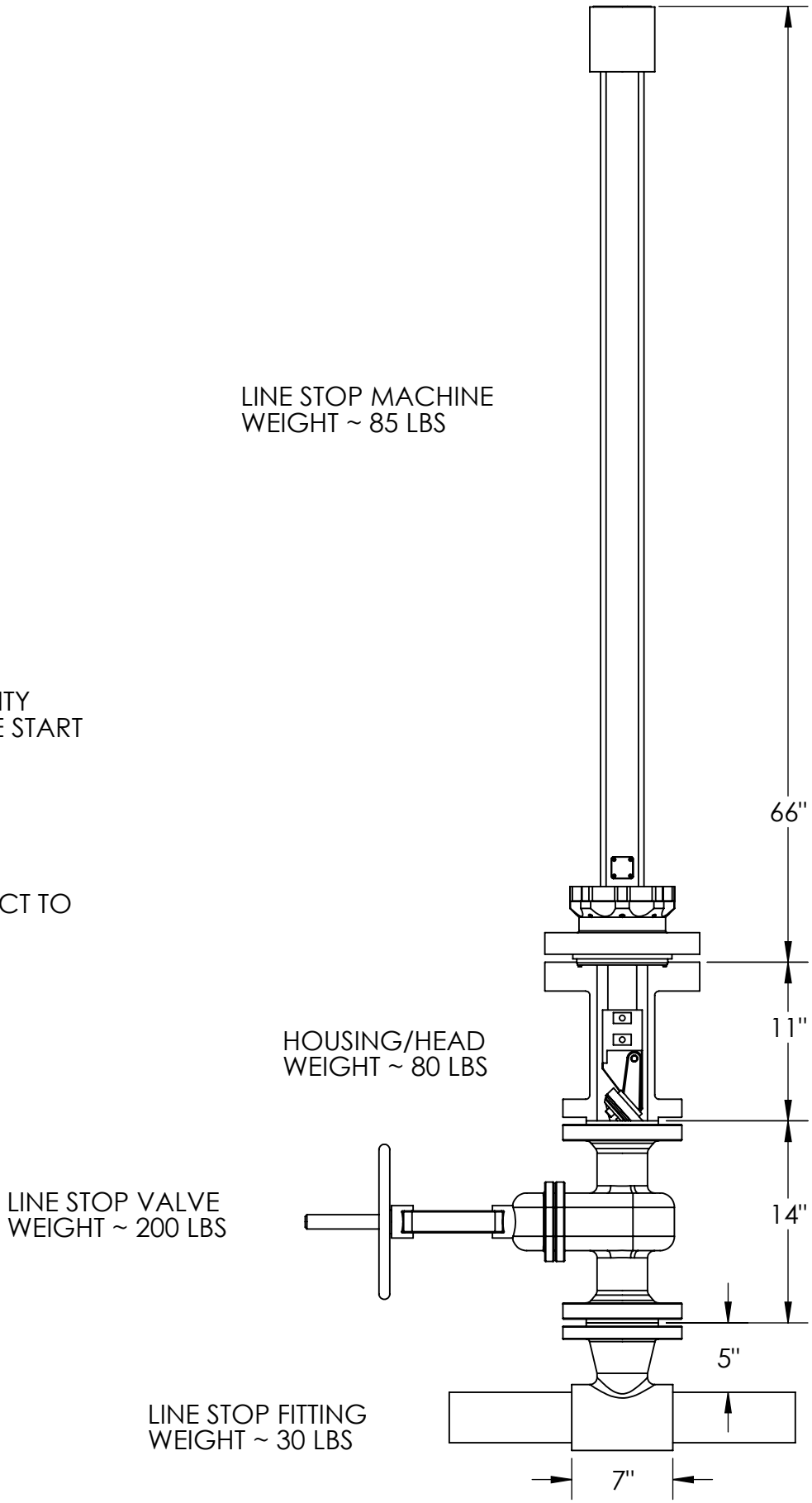

3" 600# LINE STOP 52" JACKSCREW

NOTE: EQUIPMENT AVAILABILITY MUST BE VERIFIED BEFORE THE START OF THE JOB.

NOTE: ALL WEIGHTS AND DIMENSIONS ARE BASED ON AVAILABLE DATA AND SUBJECT TO CHANGE.

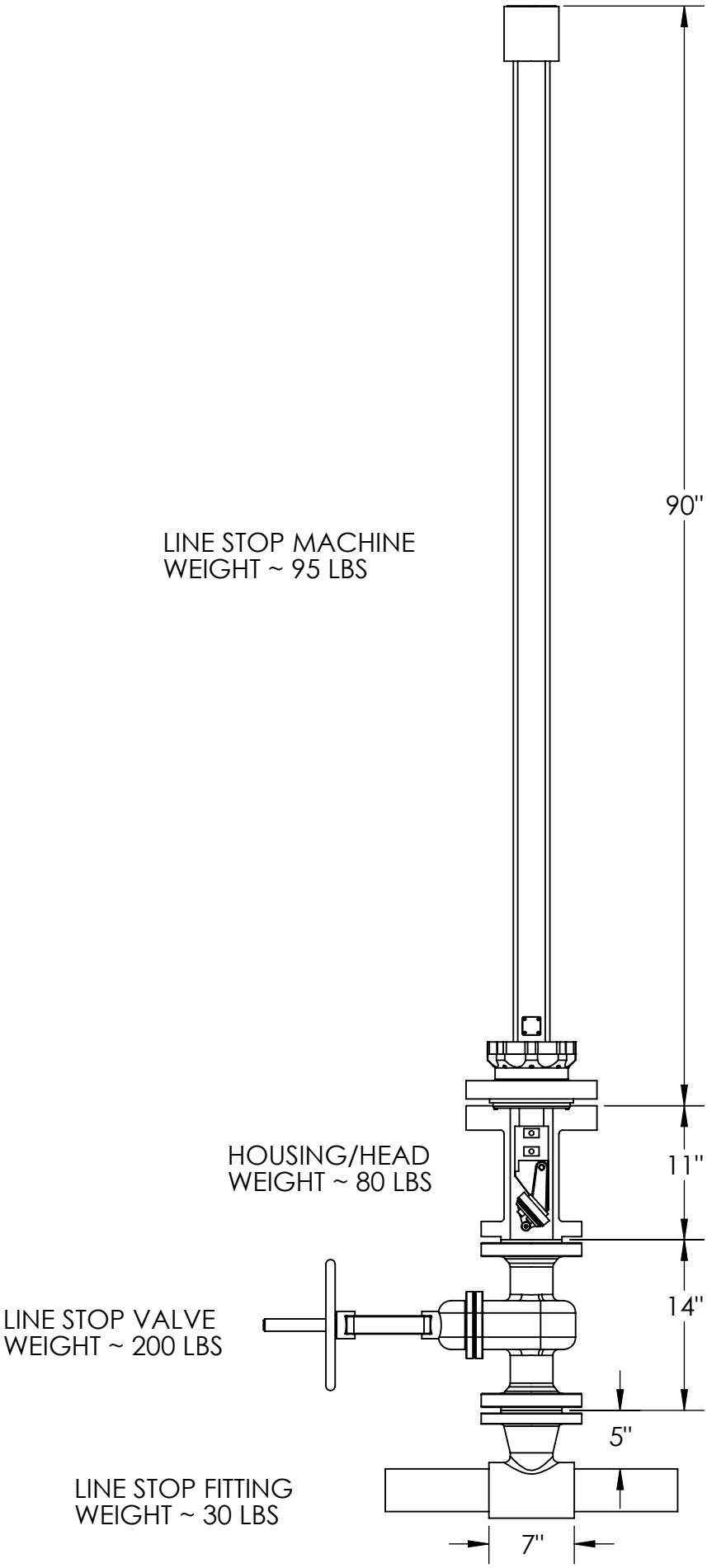

3" 600# LINE STOP 72" JACKSCREW

NOTE: EQUIPMENT AVAILABILITY MUST BE VERIFIED BEFORE THE START OF THE JOB.

NOTE: ALL WEIGHTS AND DIMENSIONS ARE BASED ON AVAILABLE DATA AND SUBJECT TO CHANGE.

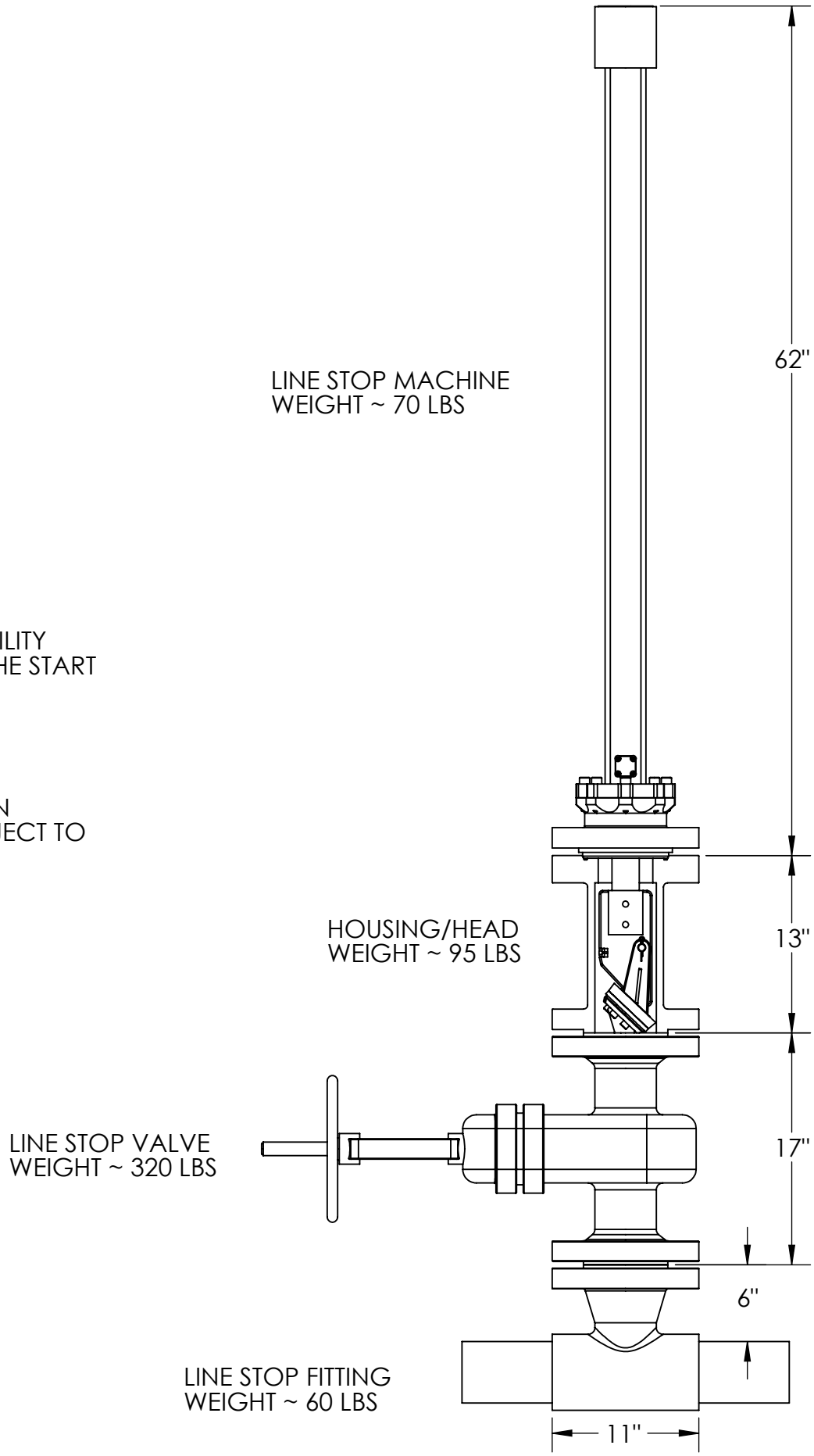

4" 600# LINE STOP 48" JACKSCREW

NOTE: EQUIPMENT AVAILABILITY MUST BE VERIFIED BEFORE THE START OF THE JOB.

NOTE: ALL WEIGHTS AND DIMENSIONS ARE BASED ON AVAILABLE DATA AND SUBJECT TO CHANGE.

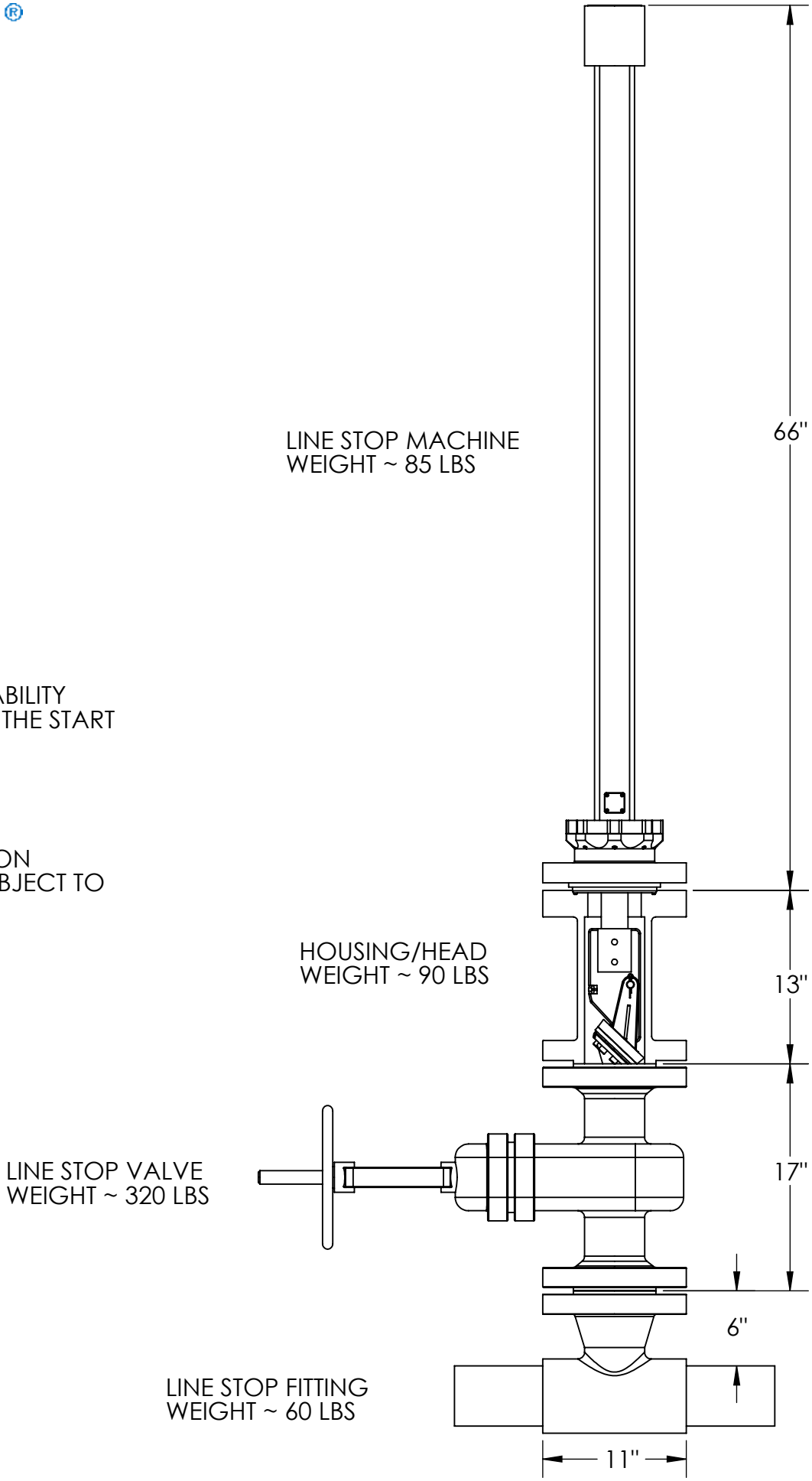

4" 600# LINE STOP 52" JACKSCREW

NOTE: EQUIPMENT AVAILABILITY MUST BE VERIFIED BEFORE THE START OF THE JOB.

NOTE: ALL WEIGHTS AND DIMENSIONS ARE BASED ON AVAILABLE DATA AND SUBJECT TO CHANGE.

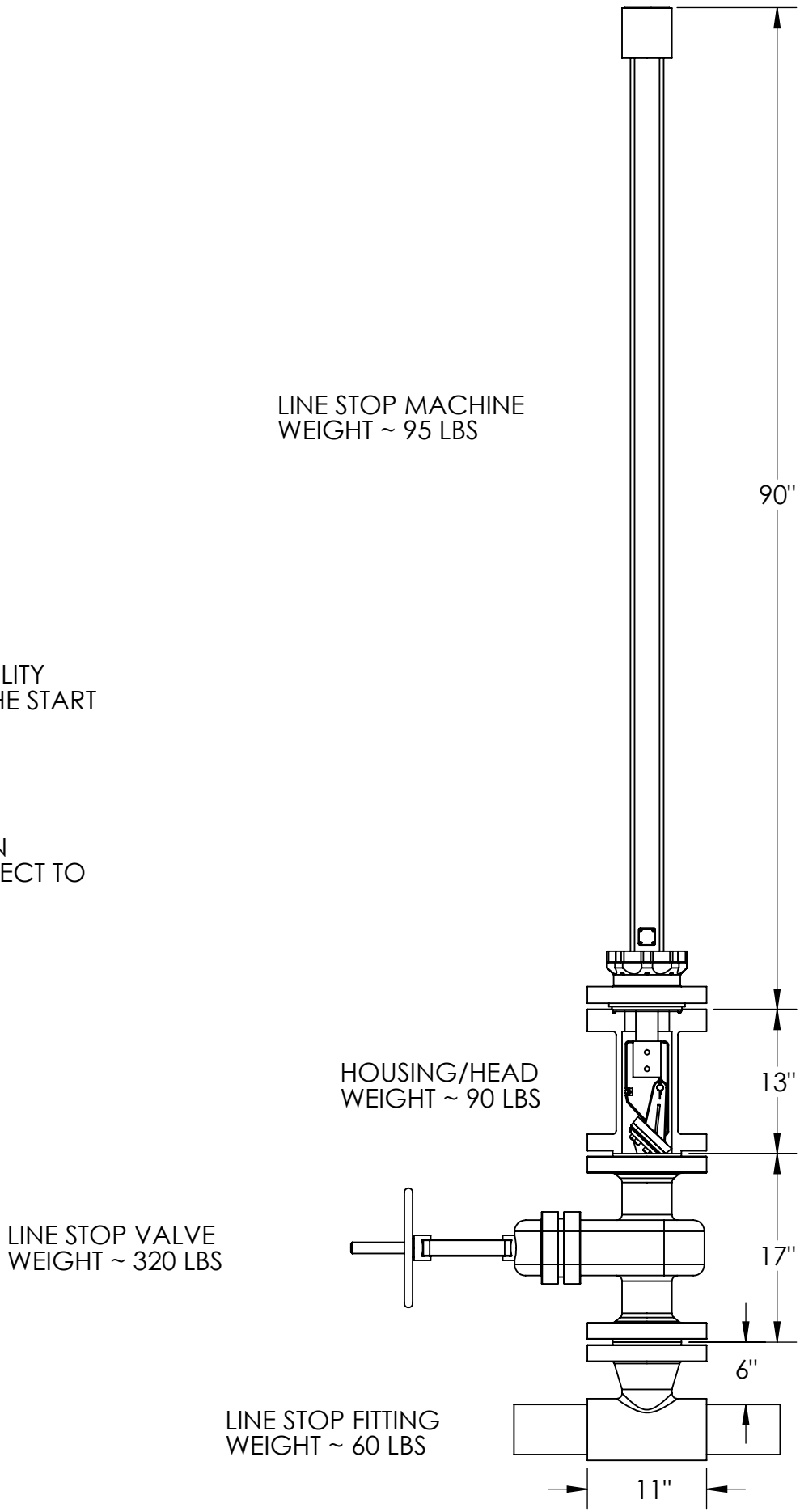

4" 600# LINE STOP 72" JACKSCREW

NOTE: EQUIPMENT AVAILABILITY MUST BE VERIFIED BEFORE THE START OF THE JOB.

NOTE: ALL WEIGHTS AND DIMENSIONS ARE BASED ON AVAILABLE DATA AND SUBJECT TO CHANGE.

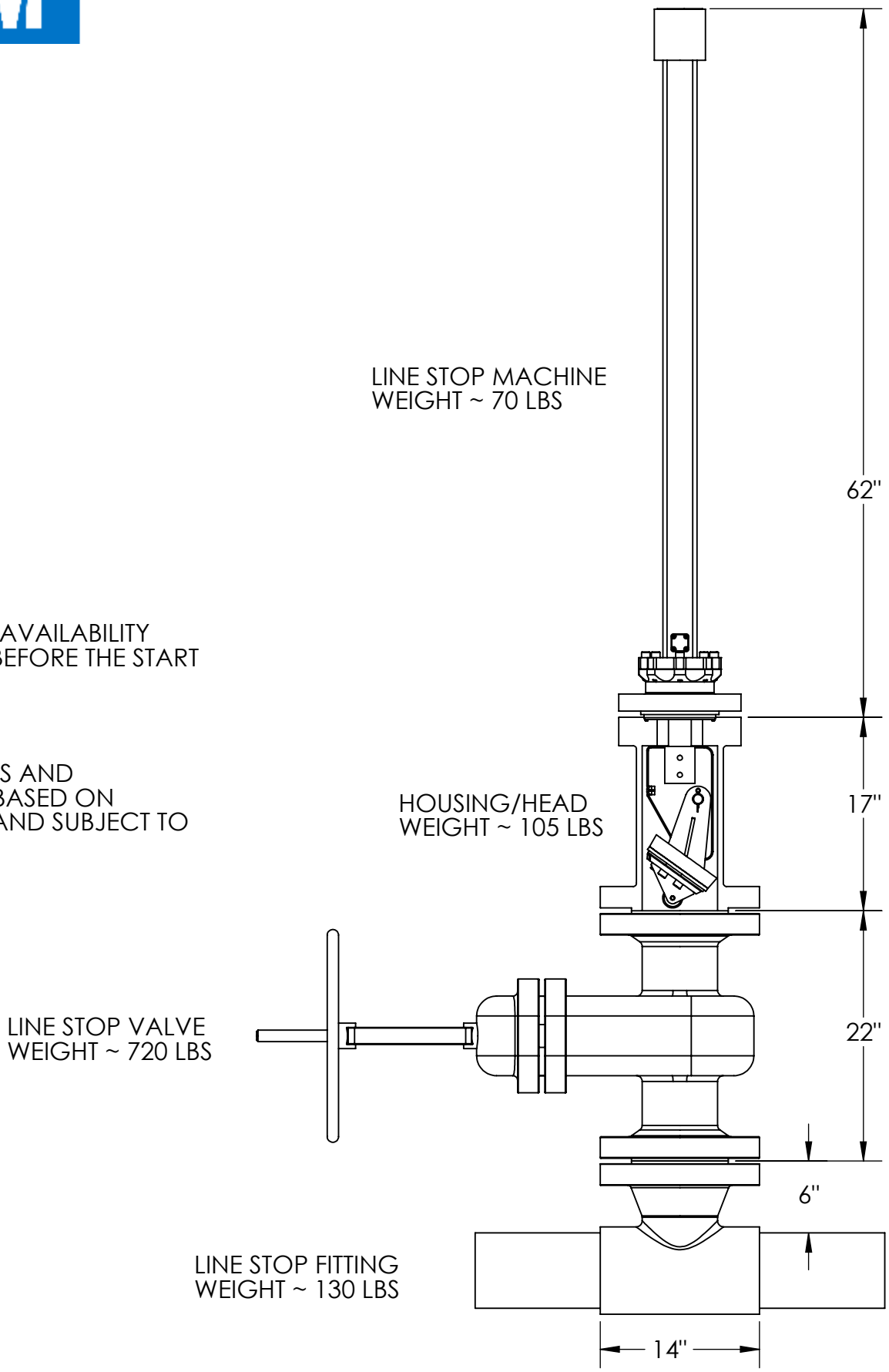

6" 600# LINE STOP 48" JACKSCREW

NOTE: EQUIPMENT AVAILABILITY MUST BE VERIFIED BEFORE THE START OF THE JOB.

NOTE: ALL WEIGHTS AND DIMENSIONS ARE BASED ON AVAILABLE DATA AND SUBJECT TO CHANGE.

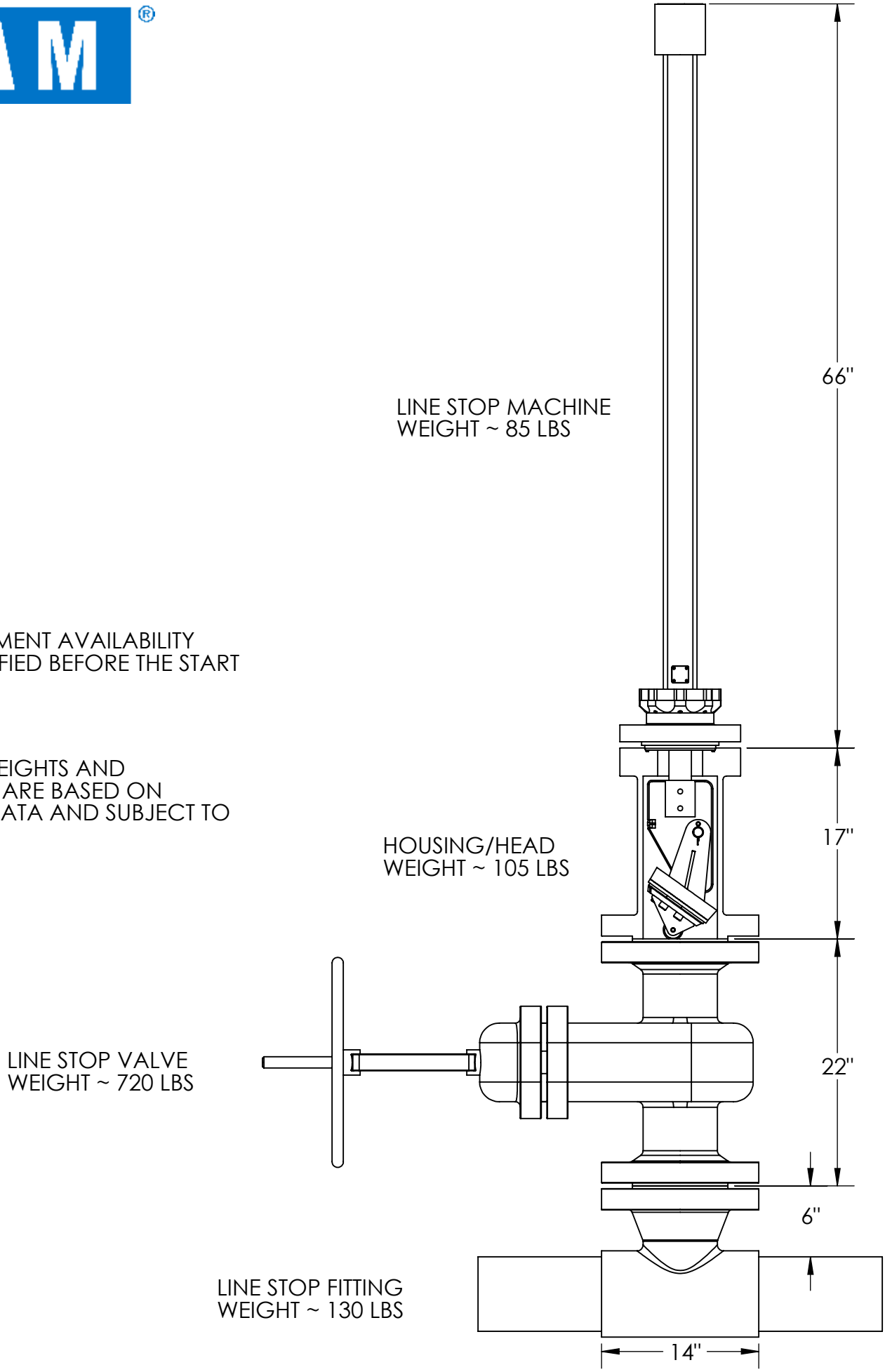

6" 600# LINE STOP 52" JACKSCREW

NOTE: EQUIPMENT AVAILABILITY MUST BE VERIFIED BEFORE THE START OF THE JOB.

NOTE: ALL WEIGHTS AND DIMENSIONS ARE BASED ON AVAILABLE DATA AND SUBJECT TO CHANGE.

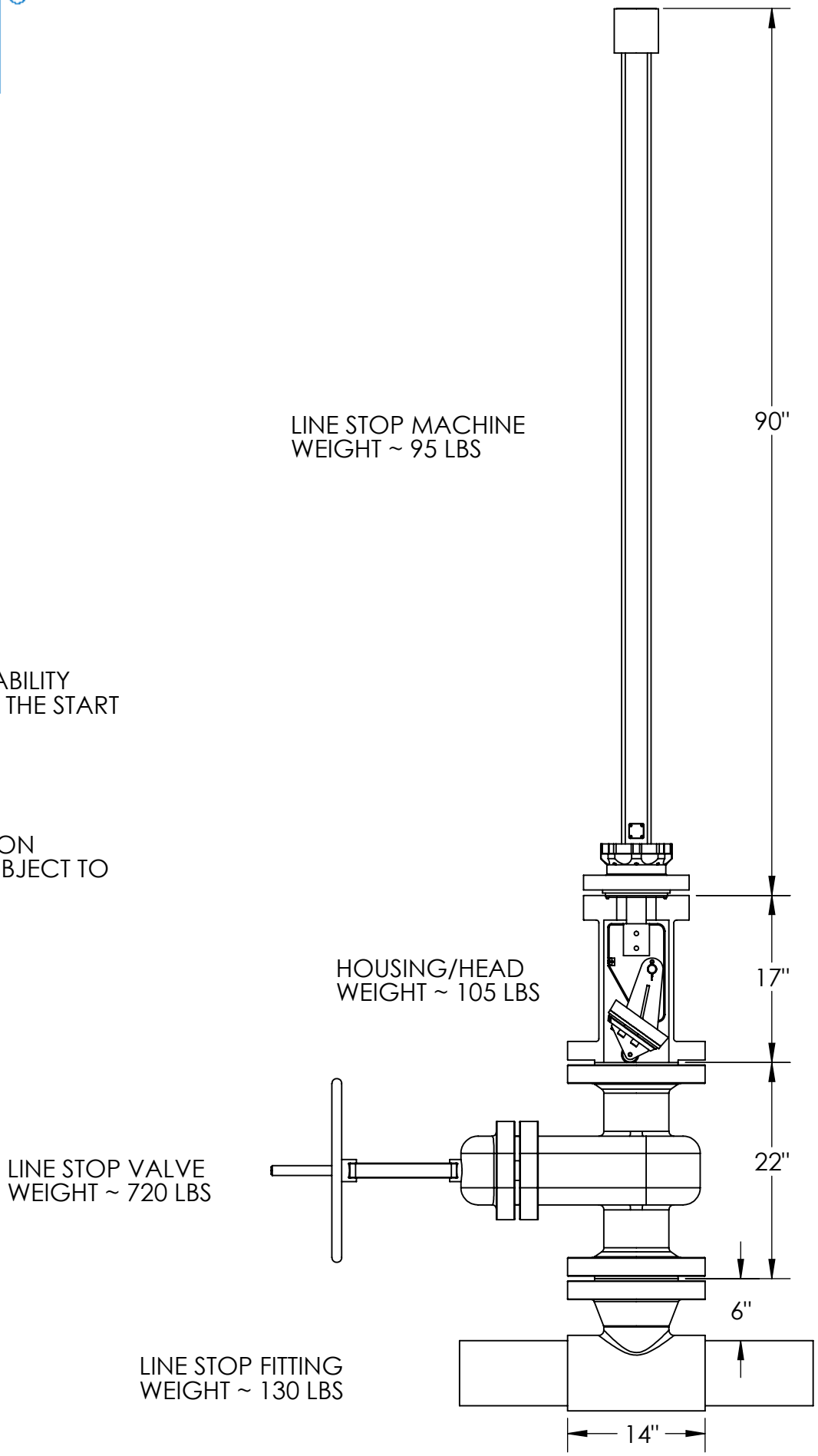

6" 600# LINE STOP 72" JACKSCREW

NOTE: EQUIPMENT AVAILABILITY MUST BE VERIFIED BEFORE THE START OF THE JOB.

NOTE: ALL WEIGHTS AND DIMENSIONS ARE BASED ON AVAILABLE DATA AND SUBJECT TO CHANGE.

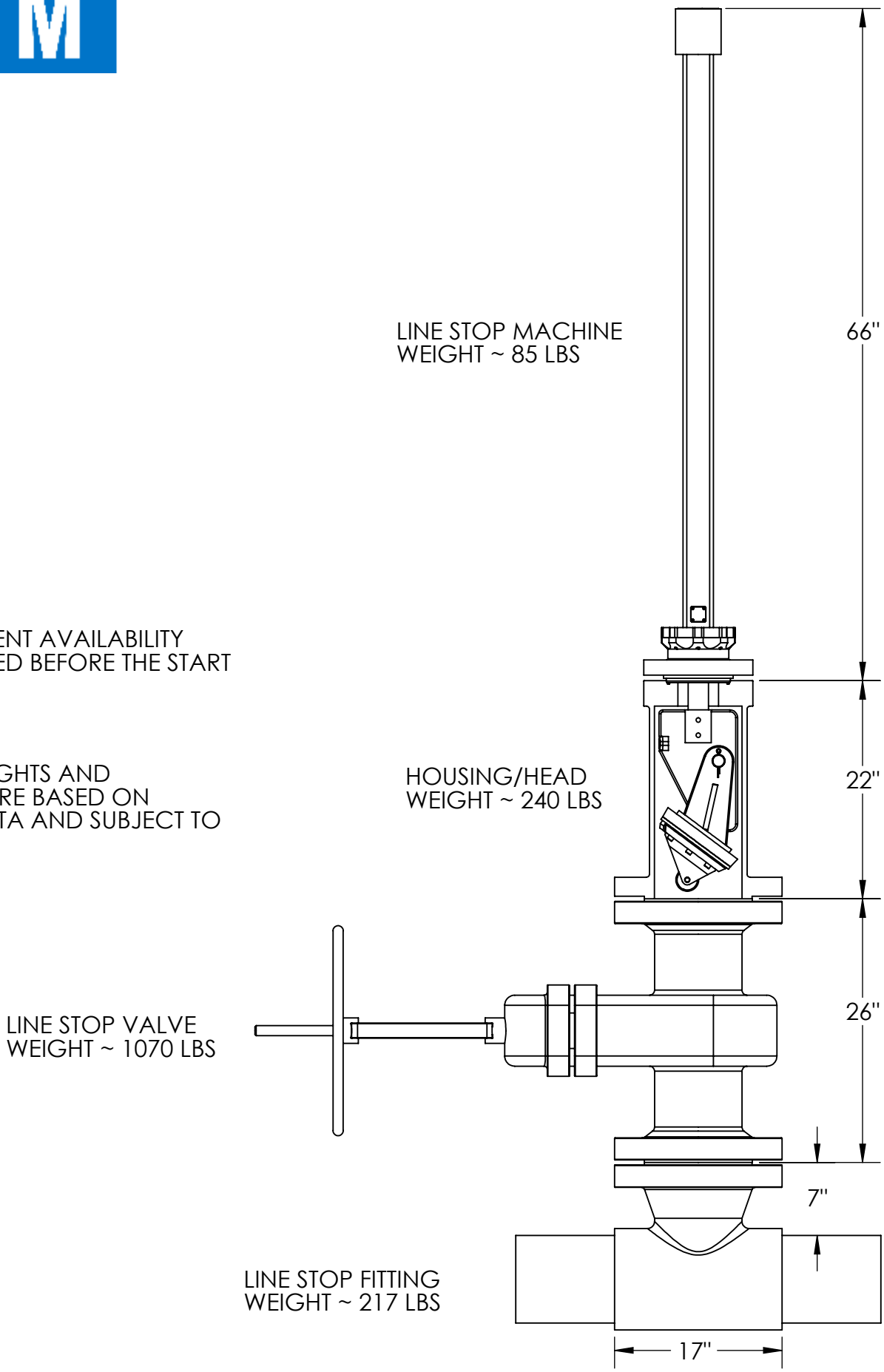

8" 600# LINE STOP 52" JACKSCREW

NOTE: EQUIPMENT AVAILABILITY MUST BE VERIFIED BEFORE THE START OF THE JOB.

NOTE: ALL WEIGHTS AND DIMENSIONS ARE BASED ON AVAILABLE DATA AND SUBJECT TO CHANGE.

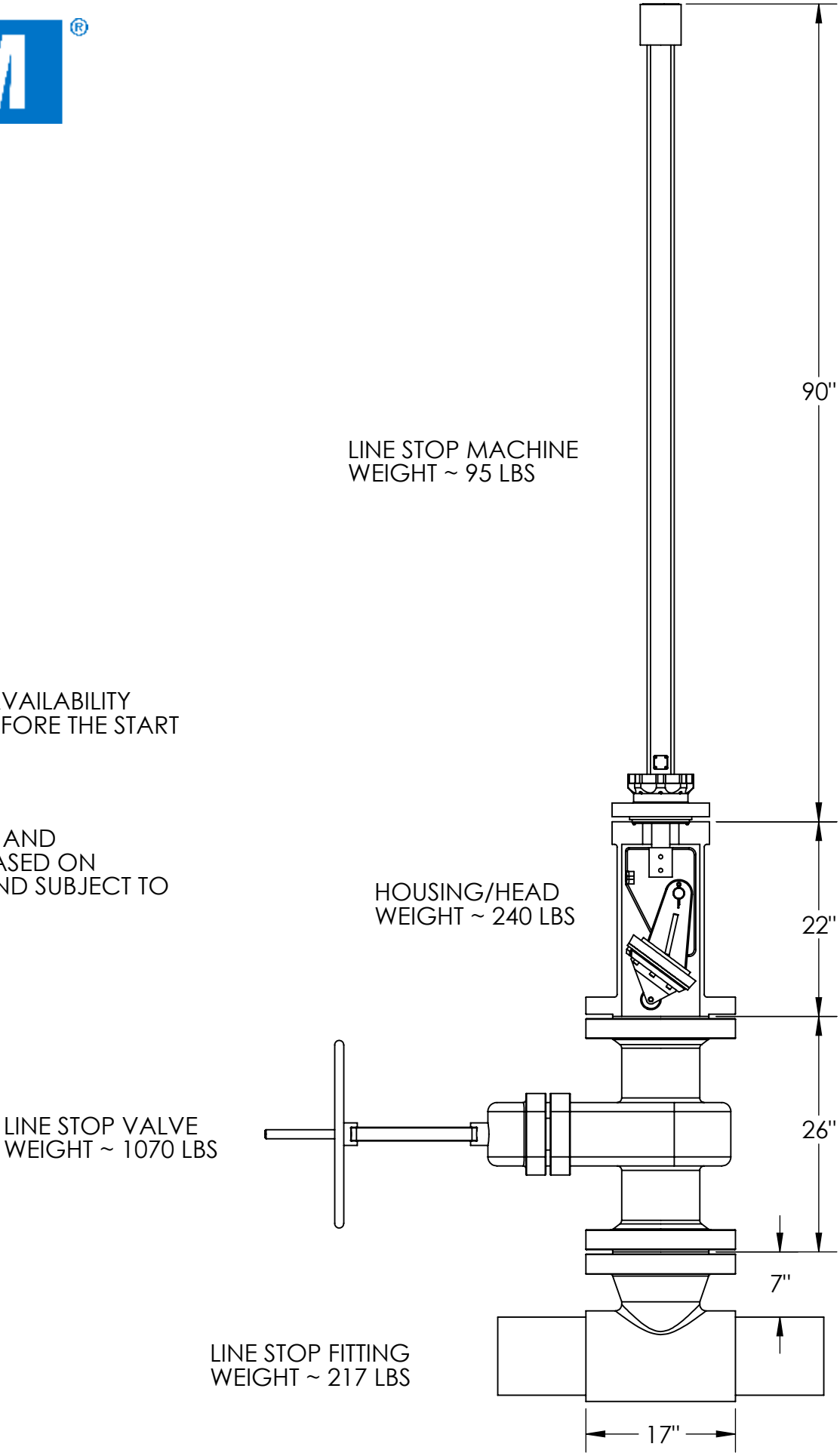

8" 600# LINE STOP 72" JACKSCREW

NOTE: EQUIPMENT AVAILABILITY MUST BE VERIFIED BEFORE THE START OF THE JOB.

NOTE: ALL WEIGHTS AND DIMENSIONS ARE BASED ON AVAILABLE DATA AND SUBJECT TO CHANGE.

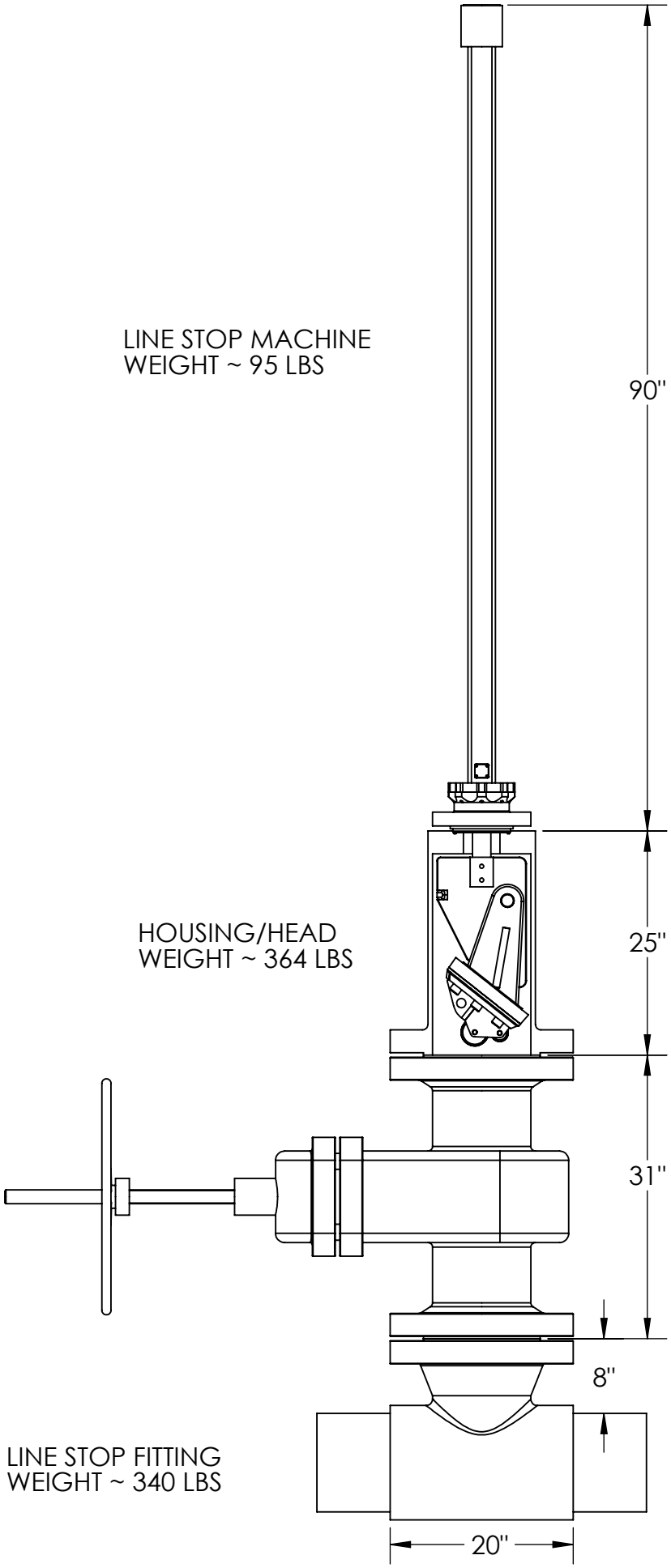

10" 600# LINE STOP 72" JACKSCREW

TEAM®

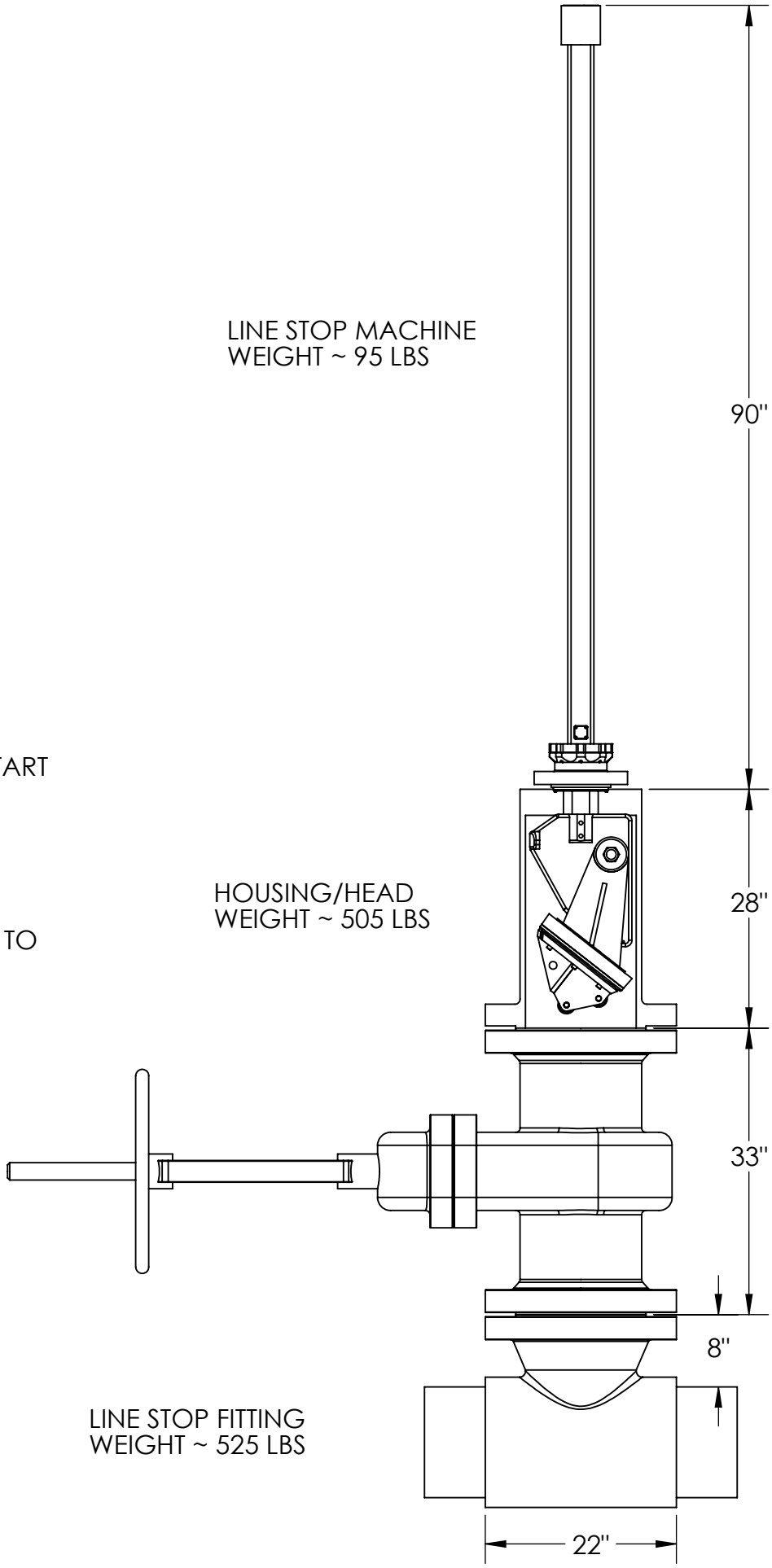

NOTE: EQUIPMENT AVAILABILITY MUST BE VERIFIED BEFORE THE START OF THE JOB.

NOTE: ALL WEIGHTS AND DIMENSIONS ARE BASED ON AVAILABLE DATA AND SUBJECT TO CHANGE.

12" 600# LINE STOP 72" JACKSCREW